Contatti REO Italia:
+39 030 279 3883 •
info@reoitalia.it

CNW 173

DC filter for photovoltaik (2 lines)



Unique Selling Point

- protection of solar cells from high frequency
- noise generated by the inverter
- designed to conform to existing and planned
- optional with current transformer
- compact construction
- low temperature rise
- universal protection for all inverters
- optional anti-surge protection

Description

Applications: The DC-filter surpresses grid-bound troubles of inverters for renewable energies like solar and wind power.

- Conforming to: VDE 0565-3/ IEC 950/ UL 1283
- Test voltage: L-L 3000 V, DC 1 s; L-PE 3000 V, DC 1s
- Climatic category: DIN IEC 60068-1
- Overload: 1,5 x INenn 1 min / h

Technical Data

- Nominal Voltage : 1000 V
- Rated current : 25 A

OPTIONS:

Integrated AC/DC current sensors type WKO/AT
The REO sensors use a Hall-effect device in their magnetic circuit to measure the primary current, which is electronically converted to a proportional output current.
It measures frequencies up to 150 kHz.

- Fast Response
- Excellent linearity

The current sensors are integrated into the filter and are ready for connection. There is no additional installation effort required. Attention! This option will change the mechanical dimensions of the filter!

Optional overvoltage protection CNW 7010

The CNW7010 provides efficient protection against power surges caused by switching, lightning and transients. A combination of gas discharge arresters and varistors provides multi-layer protection optimizing the benefits of each individual component and guaranteeing safe and fast discharge to ground. This ensures that the connected equipment continues to operate safely.

Circuit example

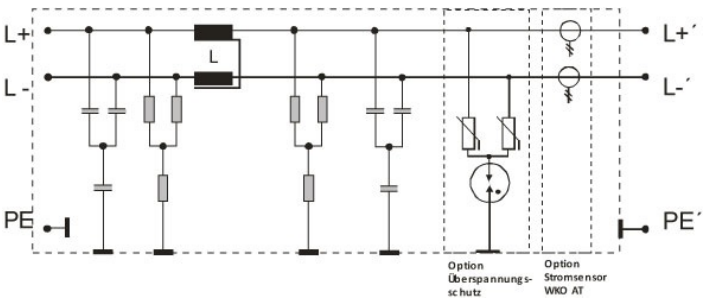

Last modified: 27.03.2018. All data is provided to the best of our knowledge and awareness and is subject to error and amendment.

Contatti REO Italia:
+39 030 279 3883 •
info@reoitalia.it

CNW 173

DC filter for photovoltaik (2 lines)

Technical data

Type	Rated voltage [V]	Rated current [A]	Leakage current [mA]	Typical Inverter power [kW]	Power loss [W]
CNW 173/250	1000 V DC	250	<30	100	10
CNW 173/400	1000 V DC	400	<30	150	16
CNW 173/600	1000 V DC	600	<30	250	28
CNW 173/800	1000 V DC	800	<30	350	28
CNW 173/1000	1000 V DC	1000	<30	400	35
CNW 173/1300	1000 V DC (1500 V DC)	1300	<30	400	35

Last modified: 27.03.2018. All data is provided to the best of our knowledge and awareness and is subject to error and amendment.

Contatti REO Italia:
+39 030 279 3883 •
info@reoitalia.it

CNW 173

DC filter for photovoltaik (2 lines)

Dimension drawing

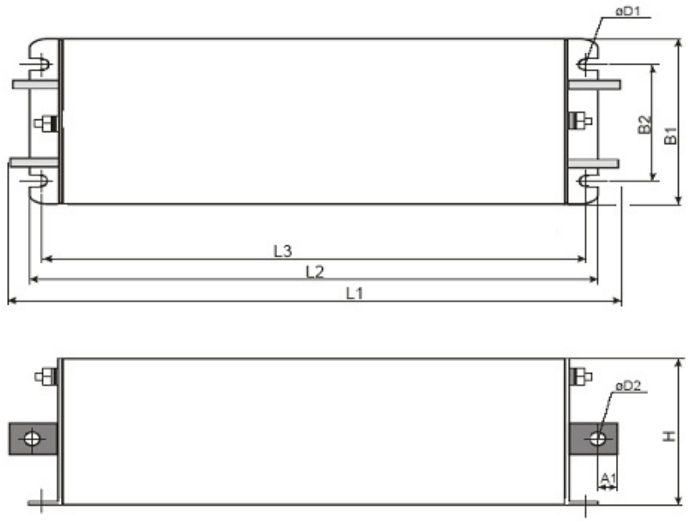

Type	Design	Dimensions									Connection
		L1 [mm]	L2 [mm]	L3 [mm]	B1 [mm]	B2 [mm]	H1 [mm]	H2 [mm]	D1 [mm]	D2 [mm]	
CNW 173/250	2	310	280	255	140	120	125	-	7	9	Busbar 20x5 mm
CNW 173/400										9	Busbar 30x5 mm
CNW 173/600		470	375	350	140	120	120	-	7	10,5	Busbar 30x10 mm
CNW 173/800										10,5	Busbar 40x10 mm
CNW 173/1000										13,0	Busbar 40x10 mm
CNW 173/1300		570	450	425	140	120	120	-	7	13,0	Busbar 50x10 mm

Last modified: 27.03.2018. All data is provided to the best of our knowledge and awareness and is subject to error and amendment.

Contatti REO Italia:
+39 030 279 3883 •
info@reoitalia.it

CNW 173

DC filter for photovoltaik (2 lines)

Insertion loss

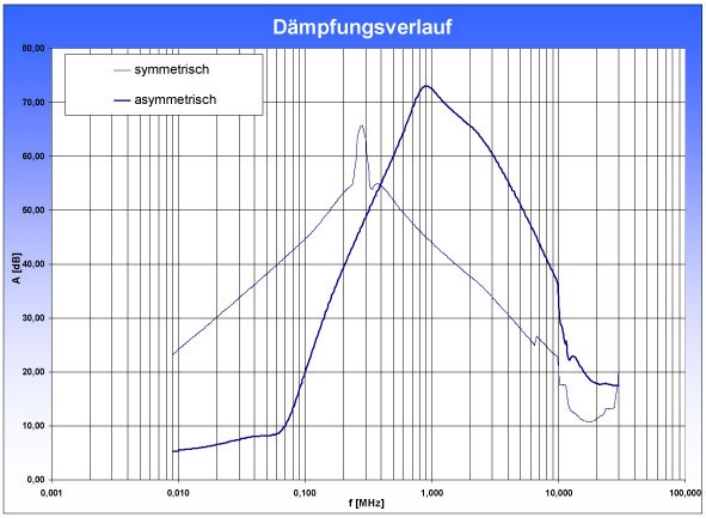

Last modified: 27.03.2018. All data is provided to the best of our knowledge and awareness and is subject to error and amendment.