Contatti REO Italia:
+39 030 279 3883 •
info@reoitalia.it

CNW 891

Single-phase DC-link choke (1 lines)



Unique Selling Point

- Reduction of harmonics
- Attenuation of current spikes of up to 70%
- Compact design
- Advantages over the mains choke:
  - Smaller size
  - Lower cost of materials / Price
  - Smaller power loss
- Production according to UL insulation system
  E251513 possible

Description

Power Noise Reduction - save energy costs.

The DC-link choke is used for smoothing the DC link current and to reduce mains harmonics in voltage source inverters.

The typical combinations of rectifiers and capacitors strains the supply network significantly. For functional reasons, the current consumption of the power supply or the inverter is not sinusoidal but pulsed at the moment of maximum voltage. DC-link chokes reduce the harmonics and relieve the supply network similar to the mains choke. In addition, the DC-link choke attenuates charging current peakssurges of the DC-link capacitors. By using a DC-link choke the supply network is less burdened with harmonic reactive power.

Improvement of the efficiency of a converter (Power Factor Correction). Starting currents and current peak are attenuated up to 70%. Mains chokes help to comply with international power quality standards IEEE 519 or EN 61000-3-2.

- Rated voltage: U ≤ 600 V
- According to: EN 60289 / EN 61558
- Test voltage: L-PE 4000 V, AC/50Hz, 60s
- Insulation class: T40/F
- Protection rating: IP00
- Climatic categorie: DIN IEC 60068-1
- Overload: 1,5 x INenn 1 min / h
- Design: standing on foot angle

Typical applications

- Drive systems for motor drives:
  - Mechanical engineering
  - Elevators / escalators
  - Pipes
  - Conveyor technology
  - Ventilation and air conditioning
  - Robotics
  - Automation technology
- Power supplies
- Wind turbines

Technical Data

- Nominal Voltage : 600 V
- Rated current : 8 - 100 A
- Inductance : 0,67 - 9,4 mH

Circuit example

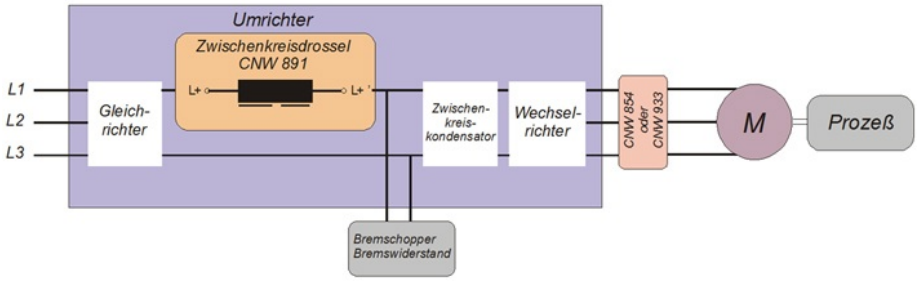

Last modified: 27.03.2018. All data is provided to the best of our knowledge and awareness and is subject to error and amendment.

Contatti REO Italia:
+39 030 279 3883 •
info@reoitalia.it

CNW 891

Single-phase DC-link choke (1 lines)

Technical data

Type	Rated voltage [V]	Rated current [A]	Inductance [mH]	Rated power [kW]	Power loss [W]	Copper [kg]	Weight [kg]
CNW 891 / 8		8	9,4	3,7	15	0,4	1,4
CNW 891 / 11		11	6,2	5,5	20	0,5	2,0
CNW 891 / 15		15	4,8	7,5	23	0,7	2,3
CNW 891 / 20		20	3,3	11	28	0,8	3,6
CNW 891 / 28		28	2,4	15	35	1,1	4,6
CNW 891 / 34	600 VDC	34	2,0	18,5	40	1,3	5,2
CNW 891 / 40		40	1,6	22	43	1,5	6,9
CNW 891 / 55		55	1,2	30	45	2,3	7,8
CNW 891 / 70		70	0,98	37	50	2,5	10,1
CNW 891 / 85		85	0,81	45	53	2,9	13,6
CNW 891 / 100		100	0,67	55	65	4,4	15,9

Higher power ratings on request

Last modified: 27.03.2018. All data is provided to the best of our knowledge and awareness and is subject to error and amendment.

Contatti REO Italia:
+39 030 279 3883 •
info@reoitalia.it

CNW 891

Single-phase DC-link choke (1 lines)

Dimension drawings

Version with cable lugs

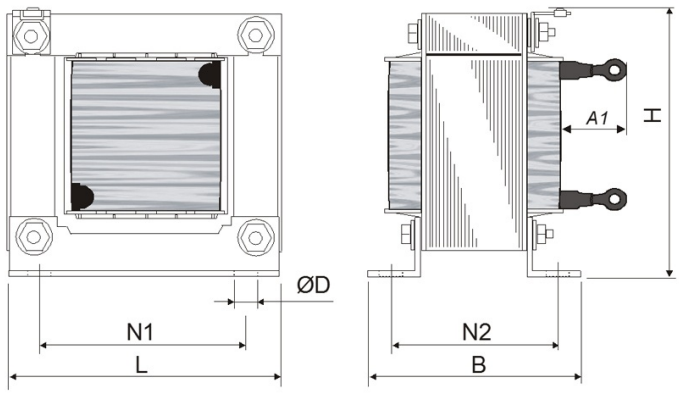

Version with copper bar

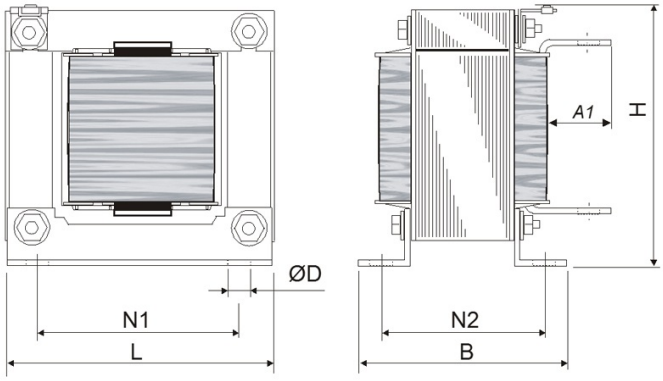

Dimensions

Type	Version	Dimensions							Connection
		L [mm]	B [mm]	H [mm]	N1 [mm]	N2 [mm]	D1 [mm]	A1 [mm]	
CNW 891 / 8	Cable lugs	85	79	76	64	44	4,8 x 9	25	M4 x 2,5
CNW 891 / 11	Cable lugs	85	95	76	64	59	4,8 x 9	25	M4 x 2,5
CNW 891 / 15	Cable lugs	96	78	88	84	62	5,8 x 11	30	M4 x 4,0
CNW 891 / 20	Cable lugs	96	102	88	84	84	5,8 x 11	30	M4 x 4,0
CNW 891 / 28	Cable lugs	105	103	95	84	85	5,8 x 11	35	M5 x 10
CNW 891 / 34	Cable lugs	120	101	108	90	84	5,8 x 11	35	M5 x 16
CNW 891 / 40	Cable lugs	120	120	108	90	103	5,8 x 11	35	M6 x 16
CNW 891 / 55	Cable lugs	150	106	134	122	86	7 x 13	40	M6 x 25
CNW 891 / 70	Cable lugs	150	123	134	122	103	7 x 13	40	M8 x 35
CNW 891 / 85	Copper bar	150	149	134	122	129	7 x 13	40	M8
CNW 891 / 100	Copper bar	174	108	152	135	128	7 x 13	40	M8

Last modified: 27.03.2018. All data is provided to the best of our knowledge and awareness and is subject to error and amendment.