Your contact:
+49-(0)2 12-88 04-0 • info@reo.de

CNW 811

Three-phase dv/dt filter



Unique Selling Point

- High inductance
- Reduced losses
- Easy to install
- Minimum stray fields
- High damping
- Robust housing

Description

Output filter used with fast switching semiconductors, for reducing harmonics. Reduction of leakage currents. Additional suppression of interference, especially in IT networks.The ideal link between frequency drive and motor.

- Conforming to: VDE 0565-3 / IEC 950 / UL 1283
- Test voltage: L-L 2100 V,DC 1min, L-PE 2700 V,DC 1min
- Overload: 1,5 x I 1 min/h
- Climatic catagory: DIN IEC 68 Teil 1 25/085/21
- Rated voltage: 3 x 500 VAC

Technical Data

- Nominal Voltage : 500 V
- Rated current : 6 - 100 A
- Inductance : 0,7 - 7,5 mH

Circuit example

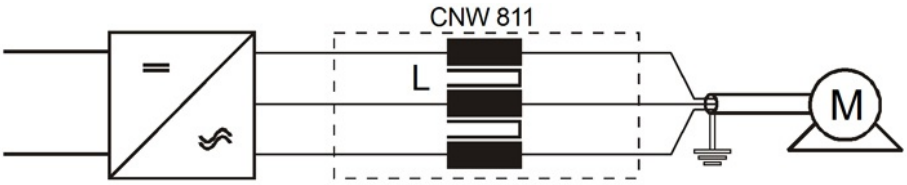

Last modified: 27.03.2018. All data is provided to the best of our knowledge and awareness and is subject to error and amendment.

Your contact:
+49-(0)2 12-88 04-0 • info@reo.de

CNW 811

Three-phase dv/dt filter

Technical data

Type	Rated voltage [V]	Rated current [A]	Inductance [mH]	DC resistance [mOhm]
CNW 811/6	3 x 500, AC	3 x 6	7,5	50
CNW 811/10		3 x 10	4,5	19
CNW 811/16		3 x 16	4	12
CNW 811/25		3 x 25	2,5	6,8
CNW 811/36		3 x 36	1,8	3,5
CNW 811/64		3 x 64	1,5	1,5
CNW 811/85		3 x 85	1,2	1
CNW 811/100		3 x 100	0,7	0,7

Last modified: 27.03.2018. All data is provided to the best of our knowledge and awareness and is subject to error and amendment.

Your contact:
+49-(0)2 12-88 04-0 • info@reo.de

CNW 811

Three-phase dv/dt filter

Dimension drawings

Housing 1

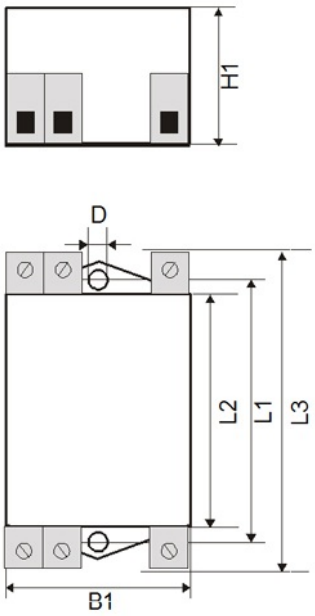

Housing 2

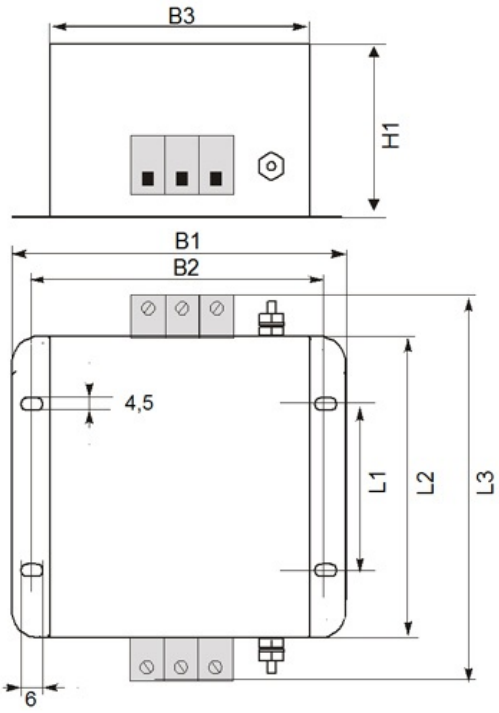

Connection

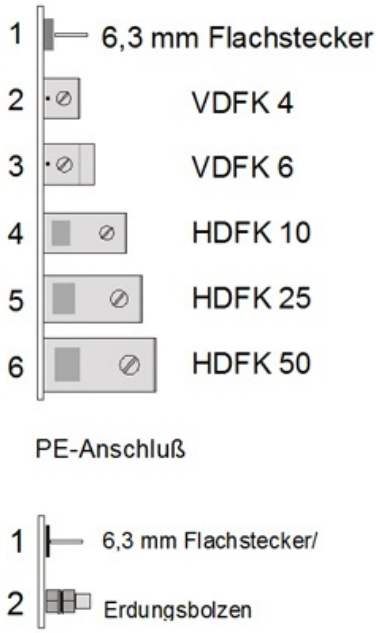

Dimensions

Type	B1 [mm]	B2 [mm]	B3 [mm]	D [mm]	H1 [mm]	L1 [mm]	L2 [mm]	L3 [mm]	Housing	Connection
CNW 811/6	50	-	-	5,3	40	87	65	75	A	2
CNW 811/10	50	-	-	5,3	40	87	65	75	A	2
CNW 811/16	105	95	84,5	4,5	57	122	100	51	B	2
CNW 811/25	105	95	84,5	4,5	57	122	100	51	B	3
CNW 811/36	105	95	84,5	4,5	57	122	100	51	B	3
CNW 811/64	150	136	120	6,2	65	239	200	115	B	5
CNW 811/85	150	136	120	6,2	65	239	200	115	B	6
CNW 811/100	150	136	120	6,2	65	239	200	115	B	7

Last modified: 27.03.2018. All data is provided to the best of our knowledge and awareness and is subject to error and amendment.