Contatti REO Italia:
+39 030 279 3883 •
info@reoitalia.it

CNW 933

Three-phase sinusoidal filter



Unique Selling Point

- Output voltage is sinusoidal
- Switching edges are completely flattened
- High attenuation of spurious emissions of lines
- Effective against symmetrical interference
- Motor cables possible to 1000m
- Saving the shielded cable possible
- Extended service life of electrical consumers
- Reduction of engine noise
- Low leakage currents on the motor
- Easy construction
- Production according to UL insulation system E251513 possible

Description

Sinusoidal output current - save costs and trouble-free operation.

For particularly long cable lengths of > 100m between inverter and motor the shielded cable for EMI suppression used can cause a capacitive coupling. A conventional motor choke can not provide sufficient damping in such cases.

The sinusoidal filter is a low pass from inductance and capacitance and has a very low resonance frequency. So it is able to generate a largely sinusoidal current. The operation and the loss balance of the asynchronous motor behave like the normal mains operation. The typical motor noise with converter do not occur and a shielded cable to the motor can be dispensed. Losses and heating are greatly minimized and the leakage current will be reduced. Longer motor cable lengths are possible. The motor insulation is protected, thus increasing the service life.

The sinusoidal filter also attenuates the conducted interference in lower frequency range very good. The losses and the typical noise in the motor plate can be reduced.

- Rated voltage: U ≤ 3 x 500 V
- Max. voltage ripple: 5%
- Field frequency: 0 - 60 Hz
- Drive switching frequency: up to 150 A >4kHz, from 150 A >1,5KHz
- Short-circuit voltage Uk: 8% (bei 400V)
- Voltage drop: 18,4 V/Strang (bei IN und 50Hz)
- Max. Cable length to the motor: 600 m (unshielded) 1000m (shielded)
- According to: EN 60289 / EN 61558
- Test voltage: L-L 2500 V, AC/50Hz 60s; L-PE 2500 V, AC/50Hz 60s
- Insulation class: T40/F
- Protection class: IP00
- Climatic category: DIN IEC 60068-1
- Overload: 1,5 x INenn 1 min / h
- Ambient temperature: 40 °C
- Design: standing on foot angle

Typical applications

- Drive systems for motor drives:
  - Mechanical engineering
  - Elevators / escalators
  - Pipes
  - Conveyor technology
  - Ventilation and air conditioning
  - Robotics
  - Automation technology
- Power supplies
- Wind turbines

Technical Data

- Nominal Voltage : 500 V
- Rated current : 2 - 1200 A
- Inductance per strand : 0,05 - 25 mH

Circuit example

Last modified: 27.03.2018. All data is provided to the best of our knowledge and awareness and is subject to error and amendment.

Contatti REO Italia:
+39 030 279 3883 •
info@reoitalia.it

CNW 933

Three-phase sinusoidal filter

Technical data

Type	Rated voltage [V]	Rated current [A]	Inductance [mH]	Capacity [µF]	Power loss [W]	Copper / Alu [kg]	Weight [kg]
CNW 933 / 2	3x 500 V	2	25	0,22	20	0,5 / --	1,15
CNW 933 / 4		4	12,5	1	30	0,9 / --	2,4
CNW 933 / 6		6	7,5	2,2	40	0,8 / --	2,9
CNW 933 / 8		8	5,8	2,2	40	0,9 / --	3
CNW 933 / 10		10	5,6	2,2	50	1,9 / --	4,6
CNW 933 / 12		12	4,3	3,3	60	1,6 / --	6
CNW 933 / 16		16	3,4	3,3	90	2,9 / --	8
CNW 933 / 20		20	2,9	1,5	90	3,3 / --	9,3
CNW 933 / 24		24	2,4	2,2	100	3,6 / --	11
CNW 933 / 30		30	1,9	2,2	70	7,4 / --	16
CNW 933 / 37		37	16	3,3	120	8,3 / --	20,5
CNW 933 / 48		48	1.2	4,7	150	8 / --	22
CNW 933 / 60		60	0,95	6,8	160	10 / --	27
CNW 933 / 75		75	0,79	6,8	160	13,8 / --	34
CNW 933 / 90		90	0,68	8	200	12,6 / --	40
CNW 933 / 115		115	0,6	12	370	13,4 / --	65
CNW 933 / 120		120	0,5	18	340	-- / 6,6	58
CNW 933 / 150		150	0,326	47	310	-- / 7,1	61
CNW 933 / 180		180	0,325	40	390	-- / 8,0	76
CNW 933 / 200		200	0,293	47	550	-- / 5,7	79
CNW 933 / 250		250	0,236	68	620	-- / 6,9	89
CNW 933 / 350		350	0,167	68	810	-- / 11,3	104
CNW 933 / 400		400	0,146	120	980	-- / 11,3	106
CNW 933 / 450		450	0,13	120	960	-- / 12,3	122
CNW 933 / 500		500	0,118	120	1020	-- / 16,5	125
CNW 933 / 600		600	0,103	180	1350	-- / 14,4	145
CNW 933 / 700		700	0,085	180	1180	-- / 20,7	164
CNW 933 / 750		750	0,078	120+80	1490	-- / 20,7	167
CNW 933 / 800		800	0,074	220	1530	-- / 21,4	175
CNW 933 / 900		900	0,065	180+40	1970	-- / 25,4	232
CNW 933 / 1000		1000	0,059	120+120	2400	-- / 22,6	229
CNW 933 / 1200		1200	0,05	220+220	2410	-- / 35,4	309

Last modified: 27.03.2018. All data is provided to the best of our knowledge and awareness and is subject to error and amendment.

Contatti REO Italia:
+39 030 279 3883 •
info@reoitalia.it

CNW 933

Three-phase sinusoidal filter

Dimension drawings

Image 1

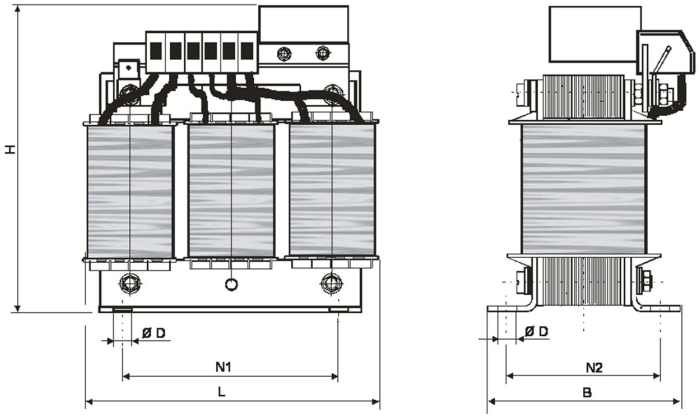

Image 2

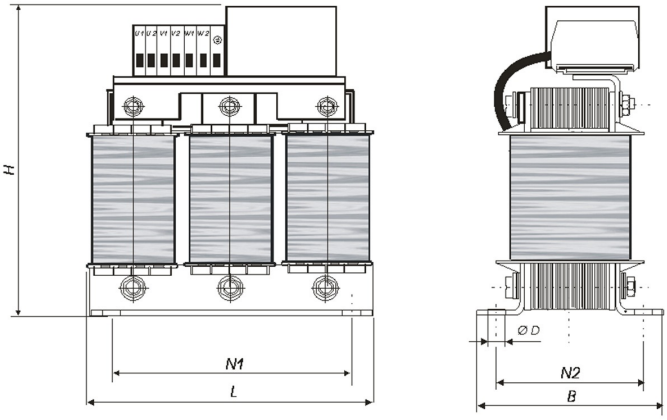

Image 3

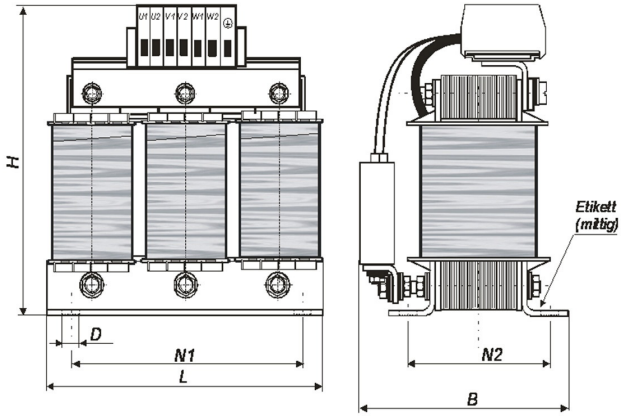

Image 4

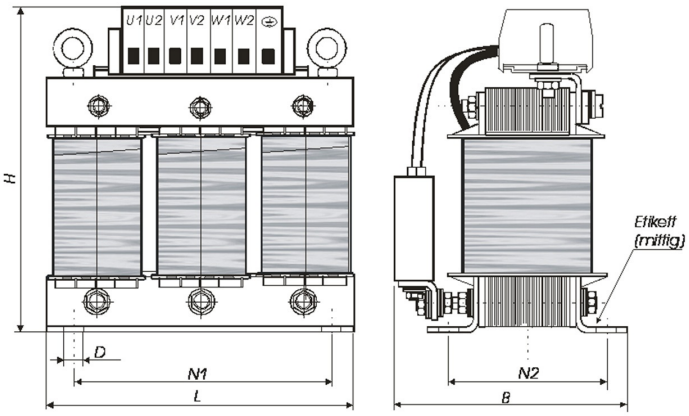

Image 5

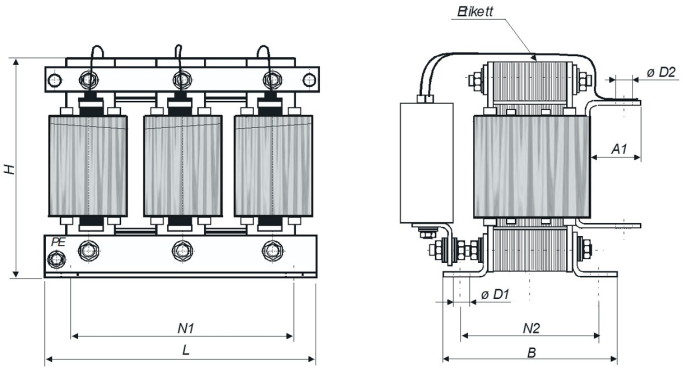

Last modified: 27.03.2018. All data is provided to the best of our knowledge and awareness and is subject to error and amendment.

Contatti REO Italia:
+39 030 279 3883 •
info@reoitalia.it

CNW 933

Three-phase sinusoidal filter

DImensions

Type	Image	L [mm]	B/B1 [mm]	B2 [mm]	H [mm]	N1 [mm]	N2 [mm]	øD [mm]	A1 [mm]	Connection [mm2]
CNW 933 / 2	1	95	47	-	105	56	34	5 x 8	-	1,5
CNW 933 / 4	2	125	61	-	167	100	43	5 x 8	-	2,5
CNW 933 / 6	2	125	72	-	175	100	56	5 x 8	-	2,5
CNW 933 / 8	2	125	72	-	175	100	56	5 x 8	-	2,5
CNW 933 / 10	2	155	77	-	205	130	57	8 x 12	-	4
CNW 933 / 12	2	155	91	-	205	130	71	8 x 12	-	4
CNW 933 / 16	2	190	82	-	235	170	58	8 x 12	-	4
CNW 933 / 20	3	190	125	-	215	170	68	8 x 12	-	10
CNW 933 / 24	3	190	135	-	215	170	78	8 x 12	-	10
CNW 933 / 30	3	230	130	-	255	176	71	9 x 13	-	10
CNW 933 / 37	3	240	160	-	275	185	85	10 x 18	-	16
CNW 933 / 48	3	240	170	-	275	185	95	10 x 18	-	16
CNW 933 / 60	4	240	180	-	285	185	105	10 x 18	-	35
CNW 933 / 75	4	300	170	-	355	224	95	10 x 18	-	50
CNW 933 / 90	4	300	205	-	355	224	120	10 x 18	-	50
CNW 933 / 115	4	360	218	-	412	264	157	10 x 18	-	95
CNW 933 / 120	5	360	258	183	351	264	157	10x18	32	9
CNW 933 / 150	5	360	298	183	345	264	157	10x18	37	11
CNW 933 / 180	5	360	321	213	353	264	187	10x18	37	11
CNW 933 / 200	5	360	329	213	347	264	187	10x18	39	11
CNW 933 / 250	5	360	338	223	348	264	197	10x18	39	11
CNW 933 / 350	5	480	327	204	446	356	149	13x20	49	13
CNW 933 / 400	5	450	348	204	445	356	168	13x20	49	13
CNW 933 / 450	5	480	365	221	450	356	185	13x20	49	13
CNW 933 / 500	5	480	364	221	448	356	185	13x20	49	13
CNW 933 / 600	5	480	370	221	528	356	185	13x20	59	13
CNW 933 / 700	5	480	386	234	530	356	198	13x20	59	13
CNW 933 / 750	5	480	386	234	531	356	198	13x20	59	13
CNW 933 / 800	5	480	406	244	524	356	208	13x20	69	2x13
CNW 933 / 900	5	550	610	254	560	356	174	13x26	79	2x13
CNW 933 / 1000	5	550	606	254	557	356	174	13x26	79	2x13
CNW 933 / 1200	5	550	665	264	703	356	184	13x26	79	2x13

Last modified: 27.03.2018. All data is provided to the best of our knowledge and awareness and is subject to error and amendment.