Contatti REO Italia:
+39 030 279 3883 •
info@reoitalia.it

CNW 999

Compensating choke (7 or 14% detuning factor)



Unique Selling Point

- Low inductance tolerance
- Linear behaviour even with current higher than rated current
- Connection on terminals or wire at option
- Low noise

Description

Reactive Power and harmonics compensation equipment; Protection of capacitors

- Conforming to: DIN EN 61558-2-20
- Test voltage: L-L 2100 V, DC 1 min L-PE 2700 V, DC 1 min
- Overload: 1,5 x INenn 1 min / h
- Climatic category: DIN IEC 60068-1
- Thermal class: H
- Protection degree: IP 00

Technical Data

- Nominal Voltage : 400 V
- Rated current : 9,1 - 80 A
- Inductance : 0,78 - 14,5 mH

Circuit example

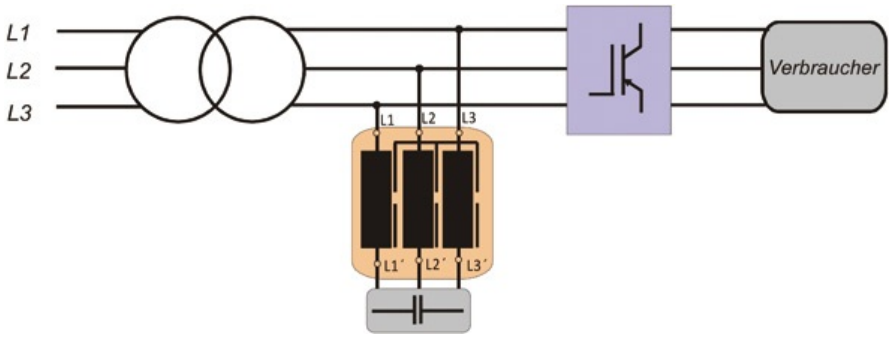

Last modified: 27.03.2018. All data is provided to the best of our knowledge and awareness and is subject to error and amendment.

Contatti REO Italia:
+39 030 279 3883 •
info@reoitalia.it

CNW 999

Compensating choke (7 or 14% detuning factor)

Technical data

Type: Detuning factor 7%	Reactive power of capacitors [kVAr]	Resonance frequency [Hz]	Detuning factor (p) [%]	Rated current [A]	Current @ 50Hz [A]	Inductance per branch [mH]	Copper [kg]	Weight [kg]
CNW 999/10/6	6,25	189	7	10,6	10,0	6,0	3	8
CNW 999/19/3	12,5	189	7	20,5	19,0	3,0	4	9
CNW 999/38/1,53	25	189	7	41,0	38,0	1,53	1*	17
CNW 999/75/0,78	50	189	7	80,0	75,0	0,78	1*	28

Type: Detuning factor 14%	Reactive power of capacitors [kVAr]	Resonance frequency [Hz]	Detuning factor (p) [%]	Nenn-strom [A]	Current @ 50Hz [A]	Inductance per branch [mH]	Copper [kg]	Weight [kg]
CNW 999/9/14,5	6,25	134	14	9,1	9,0	14,5	5	9
CNW 999/19/6,9	12,5	134	14	19,1	19,0	6,9	5	15
CNW 999/38/3,5	25	134	14	38,2	38,0	3,5	1*	24
CNW 999/76/1,73	50	134	14	76,5	76,0	1,73	1*	43

Last modified: 27.03.2018. All data is provided to the best of our knowledge and awareness and is subject to error and amendment.

Contatti REO Italia:
+39 030 279 3883 •
info@reoitalia.it

CNW 999

Compensating choke (7 or 14% detuning factor)

Dimension drawings

Bauform 1

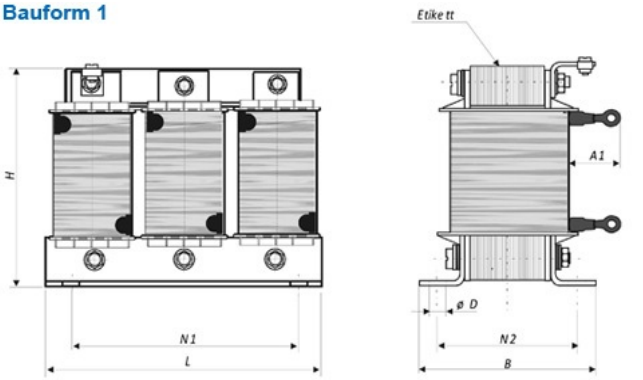

Bauform 2

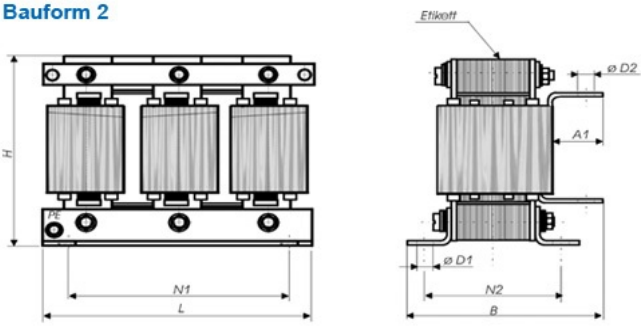

Dimensions

(Detuning factor 7%)	Image	Length (L) [mm]	Width (B) [mm]	Height (H) [mm]	Fixing (N1) [mm]	Fixing (N2) [mm]	∅ (D1) [mm]	∅ (D2) [mm]	Space (A1) [mm]	Weight [kg]
CNW 999/10/6	1	190	101	155	170	69	8x12	-	30	8
CNW 999/19/3	1	190	111	155	170	79	8x12	-	30	9
CNW 999/38/1,53	2	240	150	205	185	97	10x18	9	55	17
CNW 999/75/0,78	2	265	172	225	200	122	10x18	9	55	28

(Detuning factor 14%)	Image	Length (L) [mm]	Width (B) [mm]	Height (H) [mm]	Fixing (N1) [mm]	Fixing (N2) [mm]	∅ (D1) [mm]	∅ (D2) [mm]	Space (A1) [mm]	Weight [kg]
CNW 999/9/14,5	1	190	97	157	170	69	8x12	-	30	9
CNW 999/19/6,9	1	240	111	209	185	88	10x18	-	45	15
CNW 999/38/3,5	2	265	265	225	200	104	10x18	9	55	24
CNW 999/76/1,73	2	300	197	255	224	144	10x18	9	65	43

Last modified: 27.03.2018. All data is provided to the best of our knowledge and awareness and is subject to error and amendment.

Contatti REO Italia:
+39 030 279 3883 •
info@reoitalia.it

CNW 999

Compensating choke (7 or 14% detuning factor)

Compensating chokes CNW 999

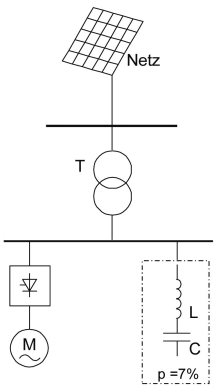

Today, more and more loads and consumers which create harmonics are being operated in our networks. These are for instance speedcontrolled drives, rectifiers, thyristor controls and fluorescent lamps. This causes the increase of harmonics load and harmoinic distortion factor of the network. This means, the reactive power on transmission and distribution installations and the transmission losses increase which results in higher energy costs.

The capacitors required for the compensation in proximity to the consumer, in conjunction with the supplying transformer and the line inductances produce a resonant circuit, which may go in undefined resonance due to the harmonics and thus may even intensify the harmonics.

The use of compensating reactors prevent this physical effect. The reactors with the capacitors are tuned to a defined serial resonant frequency taking into consideration an audio frequency ripple control operation.

Last modified: 27.03.2018. All data is provided to the best of our knowledge and awareness and is subject to error and amendment.