Contatti REO Italia:
+39 030 279 3883 •
info@reoitalia.it

CNW M 933

Three-phase sinusoidal filter

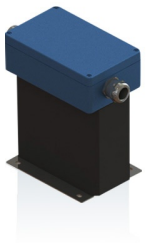

Unique Selling Point

- Usable in rough environment
- Optimal mechanical protection of the sinusoidal filter
- Different fixings possibilities caused by 3 basic versions
- Assembly of different options: cables, terminals, terminal box
- Lower surface temperature
- Protection class up to IP 66
- Output voltage is sinusoidal
- Switching edges are completely flattened
- High attenuation of spurious emissions of lines
- Effective against symmetrical interference
- Motor cables possible to 1000m
- Saving the shielded cable possible
- Extended service life of electrical consumers
- Reduction of engine noise
- Low leakage currents on the motor
- Easy construction
- Production according to UL insulation system
  E251513 possible

Description

Sinusoidal input current - save costs and trouble-free operation.

The mains chokes in fully encapsulated version are specially designed for rough environments and offer a very good mechanical protection of the component. The fully encapsulation allows design up to protection ratings IP 66.

For particularly long cable lengths of > 100m between inverter and motor the shielded cable for EMI suppression used can cause a capacitive coupling.

The sinusoidal filter is a low pass from inductance and capacitance and has a very low resonance frequency. So it is able to generate a largely sinusoidal current. The operation and the loss balance of the asynchronous motor behave like the normal mains operation. The typical motor noise with converter do not occur and a shielded cable to the motor can be dispensed. Losses and heating are greatly minimized and the leakage current will be reduced. Longer motor cable lengths are possible. The motor insulation is protected, thus increasing the service life.

The sinusoidal filter also attenuates the conducted interference in lower frequency range very good.

- Rated voltage: U ≤ 3 x 500 V
- Max. voltage ripple: 5%
- Field frequency: 0 - 60 Hz
- Drive switching frequency: up to 150 A >4kHz, from 150 A >1,5KHz
- Short-circuit voltage Uk: 8% (bei 400V)
- Voltage drop: 18,4 V/Strang (bei IN und 50Hz)
- Max. Cable length to the motor: 600 m (unshielded) 1000m (shielded)
- According to: EN 60289 / EN 61558
- Test voltage: L-L 2500 V, AC/50Hz 1 min; L-PE 2500 V, AC/50Hz 1 min
- Insulation class: T40/F
- Protection class: IP 54/66
- Climatic category: DIN IEC 60068-1
- Overload: 1,5 x INenn 1 min / h
- Ambient temperature: 40 °C
- Design: standing on foot angle

Typical applications

- Drive systems for motor drives:
  - Mechanical engineering
  - Elevators / escalators
  - Pipes
  - Conveyor technology
  - Ventilation and air conditioning
  - Robotics
  - Automation technology
- Power supplies
- Wind turbines

Technical Data

- Rated current : 2 - 37 A
- Inductance per strand : 1,9 - 29,3 mH

Circuit example

Last modified: 07.11.2018. All data is provided to the best of our knowledge and awareness and is subject to error and amendment.

Contatti REO Italia:
+39 030 279 3883 •
info@reoitalia.it

CNW M 933

Three-phase sinusoidal filter

Technical data

Type	Rated voltage [V]	Rated current [A]	Inductance [mH]	Capacity [µF]	Copper [kg]	Weight [kg]	Braid [mm2]
CNW M 933 / 2		2	29,3	0,22	0,9	2,9	1,5
CNW M 933 / 4		4	14,6	0,33	0,9	2,9	1,5
CNW M 933 / 6		6	9,7	0,73	1,0	3,6	1,5
CNW M 933 / 8		8	5,3	0,73	1,0	3,6	1,5
CNW M 933 / 10		10	5,0	0,73	1,8	5,8	1,5
CNW M 933 / 12	Up to 3 x 500	12	4,9	1,1	2,3	7,5	1,5
CNW M 933 / 16		16	3,6	1,1	3,2	9,0	2,5
CNW M 933 / 20		20	2,9	1,5	3,6	13,0	4,0
CNW M 933 / 24		24	2,4	2,2	3,6	13,0	4,0
CNW M 933 / 30		30	2,0	2,2	10,0	28,0	6,0
CNW M 933 / 37		37	1,9	3,3	11,0	29,0	6,0

Last modified: 07.11.2018. All data is provided to the best of our knowledge and awareness and is subject to error and amendment.

Contatti REO Italia:
+39 030 279 3883 •
info@reoitalia.it

CNW M 933

Three-phase sinusoidal filter

Dimension drawings

Basic version 1 - Image 1

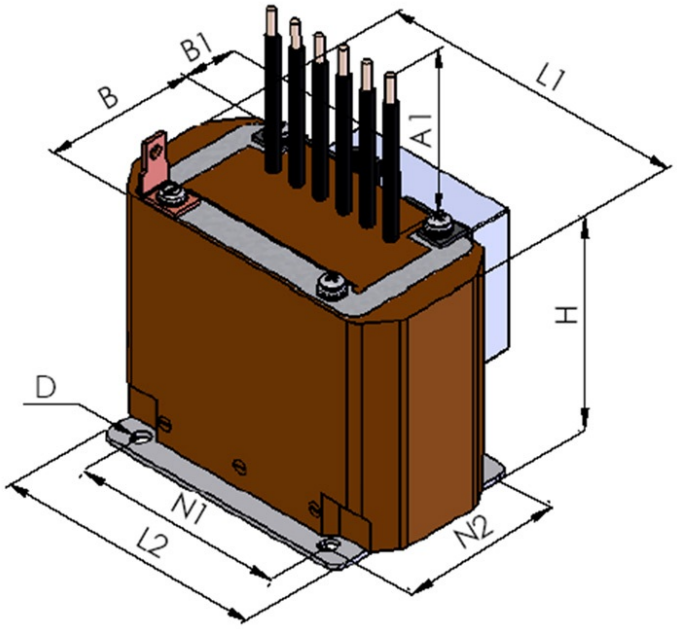

Basic version 1 - Image 2

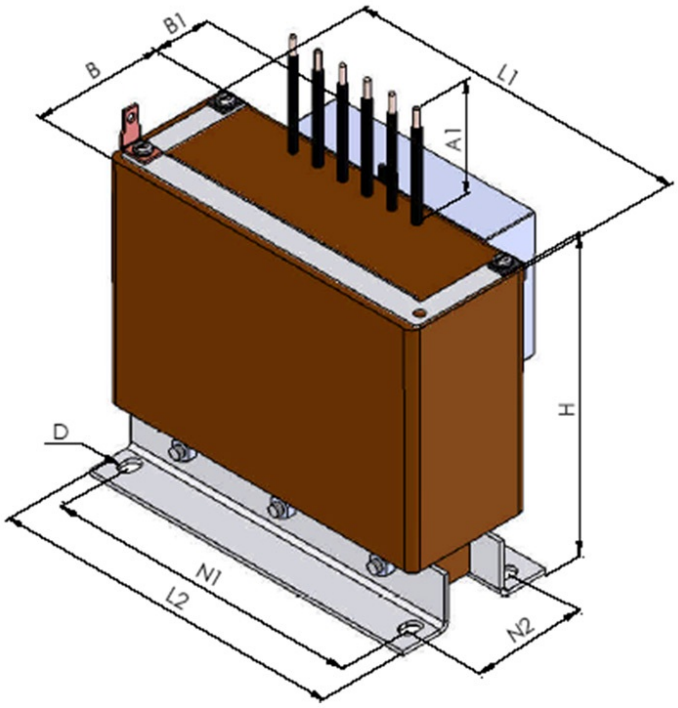

Basic version 2 - Image 3

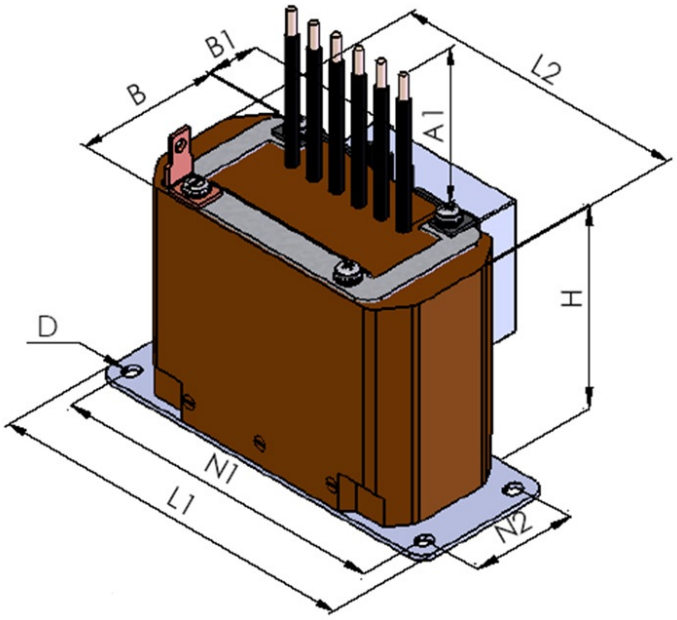

Basic version 3 - Image 4

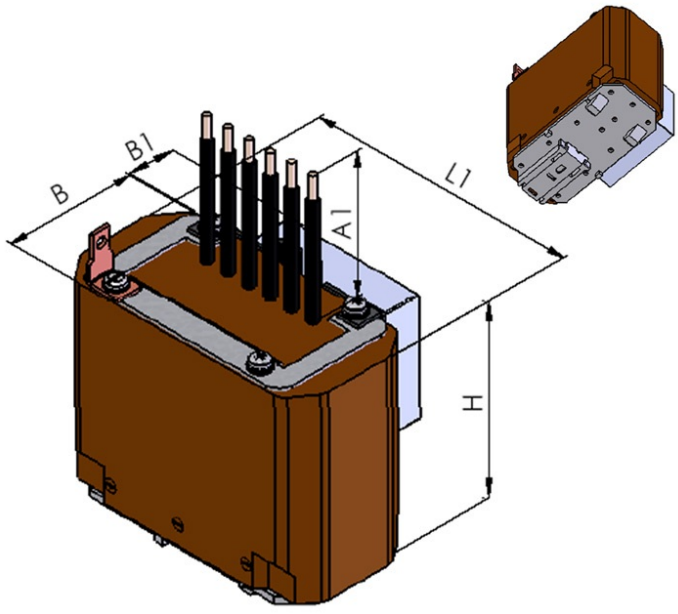

Last modified: 07.11.2018. All data is provided to the best of our knowledge and awareness and is subject to error and amendment.

Contatti REO Italia:
+39 030 279 3883 •
info@reoitalia.it

CNW M 933

Three-phase sinusoidal filter

Dimensions

Type	Image	L / L1 [mm]	L2 [mm]	B [mm]	B1 [mm]	H / H1 [mm]	H2 [mm]	N1 [mm]	N2 [mm]	øD [mm]	A1 [mm]
Basic version 1											
CNW M 933 / 2	1	140	125	51	40	113	-	100	60	5,5x7,0	200
CNW M 933 / 4	1	140	125	51	40	113	-	100	60	5,5x7,0	200
CNW M 933 / 6	1	140	125	61	40	113	-	100	70	5,5x7,0	200
CNW M 933 / 8	1	140	125	61	40	113	-	100	70	5,5x7,0	200
CNW M 933 / 10	1	175	155	61	40	137	-	130	79	5,5x12,0	300
CNW M 933 / 12	1	175	155	76	50	137	-	130	94	5,5x12,0	300
CNW M 933 / 16	2	185	190	70	45	165	-	170	58	7,8x12,0	300
CNW M 933 / 20	2	185	190	90	61	165	-	170	78	7,8x12,0	300
CNW M 933 / 24	2	185	190	90	61	165	-	170	78	7,8x12,0	300
CNW M 933 / 30	2	244	240	100	61	215	-	185	85	10x18,0	300
CNW M 933 / 37	2	244	240	100	61	215	-	185	85	10x18,0	300
Basic version 2											
CNW M 933 / 2	3	180	140	51	40	113	-	165	30	5,5 x 7,0	200
CNW M 933 / 4	3	180	140	51	40	113	-	165	30	5,5 x 7,0	200
CNW M 933 / 6	3	180	140	61	40	113	-	165	40	5,5 x 7,0	200
CNW M 933 / 8	3	180	140	61	40	113	-	165	40	5,5 x 7,0	200
CNW M 933 /10	3	215	175	61	40	137	-	200	40	5,5 x 12,0	300
CNW M 933 /12	3	215	175	76	50	137	-	200	55	5,5 x 12,0	300
Basic version 3											
CNW M 933 / 2	4	140	-	51	40	122,5	116	-	-	-	200
CNW M 933 / 4	4	140	-	51	40	122,5	116	-	-	-	200
CNW M 933 / 6	4	140	-	61	40	122,5	116	-	-	-	200
CNW M 933 / 8	4	140	-	61	40	122,5	116	-	-	-	200
CNW M 933 /10	4	175	-	61	40	146,5	140	-	-	-	300
CNW M 933 /12	4	175	-	76	50	146,5	140	-	-	-	300

Last modified: 07.11.2018. All data is provided to the best of our knowledge and awareness and is subject to error and amendment.

Contatti REO Italia:
+39 030 279 3883 •
info@reoitalia.it

CNW M 933

Three-phase sinusoidal filter

Dimension drawings of the options

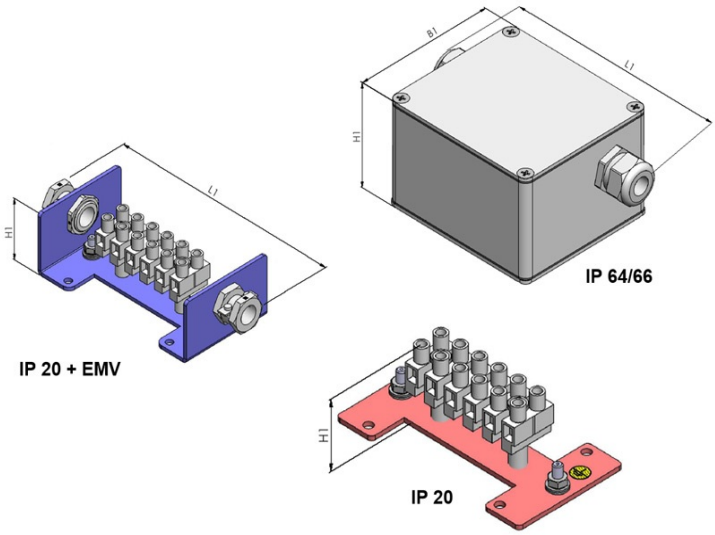

Dimensions of the options

	IP 20		IP 20 + EMV		IP 64			
Type	Terminals		Terminals + EMC - strain relief		Terminal box with EMC-screw connection			
	Cross section [mm²]	H1 [mm]	H1 [mm]	L1 [mm]	Screw connection	L1 [mm]	B1 [mm]	H1 [mm]
CNW M 933 / 2	2,5	35	34	160	M 20	151	85	80
CNW M 933 / 4	2,5	35	34	160	M 20	151	85	80
CNW M 933 / 6	2,5	35	34	160	M 20	151	85	80
CNW M 933 / 8	2,5	35	34	160	M 20	151	85	80
CNW M 933 / 10	2,5	35	35	172	M 20	196	120	80
CNW M 933 / 12	2,5	35	35	172	M 20	196	120	80
CNW M 933 / 16	6,0	35	55	215	M 20	196	120	100
CNW M 933 / 20	10,0	40	55	215	M 25	200	120	100
CNW M 933 / 24	10,0	40	55	215	M 25	200	120	100
CNW M 933 / 30	16,0	42	60	270	M 32	210	120	110
CNW M 933 / 37	16,0	42	60	270	M 32	210	120	110

Last modified: 07.11.2018. All data is provided to the best of our knowledge and awareness and is subject to error and amendment.

Contatti REO Italia:
+39 030 279 3883 •
info@reoitalia.it

CNW M 933

Three-phase sinusoidal filter

Installation

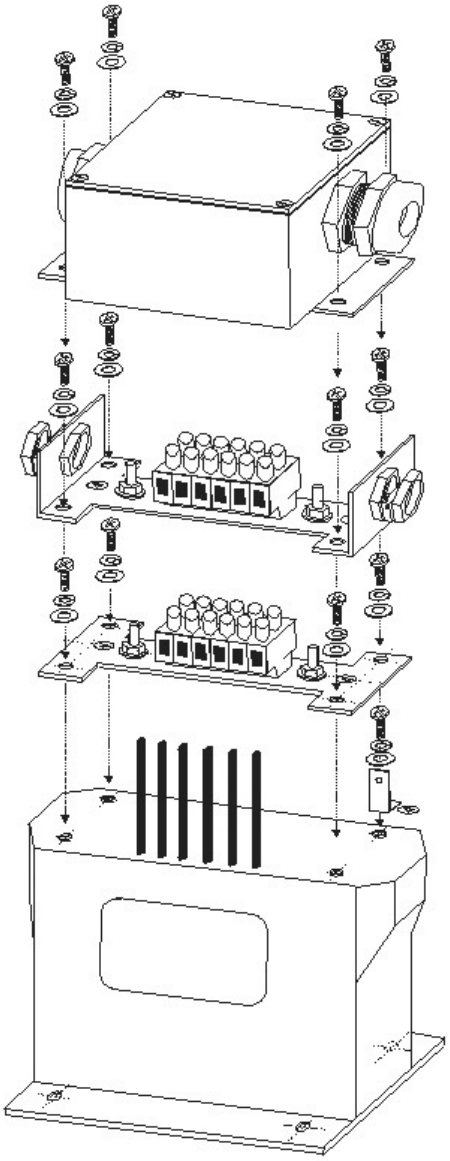

Assembly

for terminal connection in IP 64 enclosure with PE-screw connection for M4 and laterally assembled capacitor block (enclosed)

Assembly

for terminal connection with screen in IP 20 design with PE-screw connection for M4 and laterally assembled capacitor block

Assembly

for terminal connection in IP 20 design with PE-screw connection for M4 and laterally assembled capacitor block

Assembly

with cables with PE-plug-in connection 6,3 x 0,8 and laterally assembled capacitor block

Last modified: 07.11.2018. All data is provided to the best of our knowledge and awareness and is subject to error and amendment.