Contatti REO Italia:
+39 030 279 3883 •
info@reoitalia.it

CNW 854

Three-phase motor choke



Unique Selling Point

- Protection of electrical consumers
- Limitation of the voltage increase to <200V / us
- Extended service life of electrical consumers
- Reduction of engine noise
- Low leakage currents on the motor
- Longer motor cables possible
- Easy construction
- Compact design
- Production according to UL insulation system
  E251513 possible

Description

Voltage rise (<200V / us) and distortion reduce - protect electrical consumers optimally.

In addition to the increase of voltages, there is a considerable amount of symmetric and asymmetric current distortions which are generated at the motor cable through the fast switching of the power semiconductors. These are becoming more pronounced with increasing cable length. These disturbances can affect the performance of the engine by loud noises, and in extreme cases, by overheating. Here, a motor choke remedy. The motor choke reduces the voltage rise and the voltage spikes between the conductors. Furthermore, the current is smoothed.

Losses and heating are minimized and the leakage current reduced. Longer motor cable lengths are possible. By limiting the rate of voltage rise, the motor insulation is protected and thus prolongs the life. The motor choke also attenuates the conducted interference in lower frequency range very good. The losses and the typical noise in the motor plate can be reduced. Voltage rise (<200V / us) will be reduced.

Increasing the service life of motors, reduction of edge steepness dv/dt to earth and between phases, reduce motor noise, current smoothing.

- Rated voltage: U ≤ 3 x 500 V
- Reduce the voltage rise dv / dt to <200V / us
- Field frequency: 0 - 60 Hz
- Drive switching frequency: up to 150 A >4kHz, from 150 A >1,5KHz
- According to: EN 60289 / EN 61558
- Test voltage: L-L 2500 V, AC/50Hz 60s; L-PE 2500 V, AC/50Hz 60s
- Insulation class: T40/F
- Protection rating: IP00
- Climatic categorie: DIN IEC 60068-1
- Overload: 1,5 x INenn 1 min / h
- Ambient temperature: 40 °C
- Design: standing on foot angle

Typical applications

- Drive systems for motor drives:
  - Mechanical engineering
  - Elevators / escalators
  - Pipes
  - Conveyor technology
  - Ventilation and air conditioning
  - Robotics
  - Automation technology
- Power supplies
- Wind turbines

Technical Data

- Nominal Voltage : 500 V
- Rated current : 2 - 1200 A
- Inductance per strand : 0,013 - 7 mH

Circuit example

Last modified: 27.03.2018. All data is provided to the best of our knowledge and awareness and is subject to error and amendment.

Contatti REO Italia:
+39 030 279 3883 •
info@reoitalia.it

CNW 854

Three-phase motor choke

Technical data

Type	Rated voltage [V]	Rated current [A]	Inductance [mH]	Copper / Alu [kg]	Total [kg]
CNW 854 / 2	up to 3 x 500 50/60 Hz	2	7,0	0,2 / --	2,0
CNW 854 / 4		4	3,6	0,4 / --	2,0
CNW 854 / 6		6	2,3	0,4 / --	2,0
CNW 854 / 8		8	1,8	0,4 / --	2,0
CNW 854 / 10		10	1,7	0,8 / --	3,0
CNW 854 / 12		12	1,2	0,8 / --	2,7
CNW 854 / 16		16	0,9	0,8 / --	2,7
CNW 854 / 24		24	0,7	1,9 / --	4,4
CNW 854 / 30		30	0,5	2,0 / --	4,4
CNW 854 / 37		37	0,42	2,6 / --	6,3
CNW 854 / 48		48	0,38	3,6 / --	8,0
CNW 854 / 60		60	0,28	4,3 / --	8,4
CNW 854 / 75		75	0,22	3,6 / --	10,0
CNW 854 / 90		90	0,17	3,9 / --	11,6
CNW 854 / 115		115	0,14	8,7 / --	20,5
CNW 854 / 150		150	0,12	8,9 / --	21,5
CNW 854 / 180		180	0,090	0,9 / 2,3	32,0
CNW 854 / 200		200	0,080	1,3 / 2,1	41,0
CNW 854 / 250		250	0,065	1,3 / 1,8	45,0
CNW 854 / 300		300	0,053	1,5 / 2,7	44,0
CNW 854 / 350		350	0,046	2,6 / 4,6	50,0
CNW 854 / 400		400	0,041	2,6 / 4,9	58,0
CNW 854 / 500		500	0,032	2,6 / 5,2	62,0
CNW 854 / 600		600	0,028	5,0 / 5,9	65,0
CNW 854 / 700		700	0,024	5,0 / 5,7	86,0
CNW 854 / 800		800	0,021	6,6 / 9,0	108,0
CNW 854 / 900		900	0,018	13,8 / 7,6	114,0
CNW 854 / 1000		1000	0,016	13,8 / 7,6	114,0
CNW 854 / 1200		1200	0,013	13,8 / 8,0	122

Clock frequency of the frequency converter	Max. admissible cable length
Bis 16 kHz	50 m
Bis 8 kHz	150 m
Bis 4 kHz	200 m

Last modified: 27.03.2018. All data is provided to the best of our knowledge and awareness and is subject to error and amendment.

Contatti REO Italia:
+39 030 279 3883 •
info@reoitalia.it

CNW 854

Three-phase motor choke

Dimension drawings

Image 1

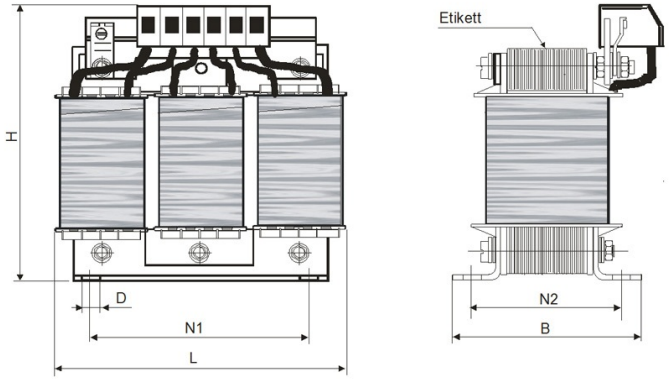

Image 2

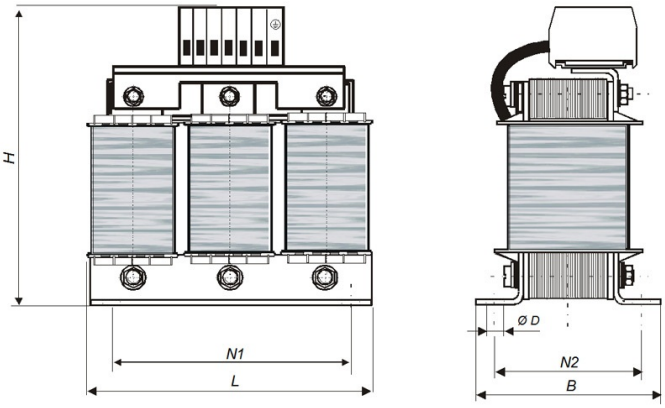

Image 3

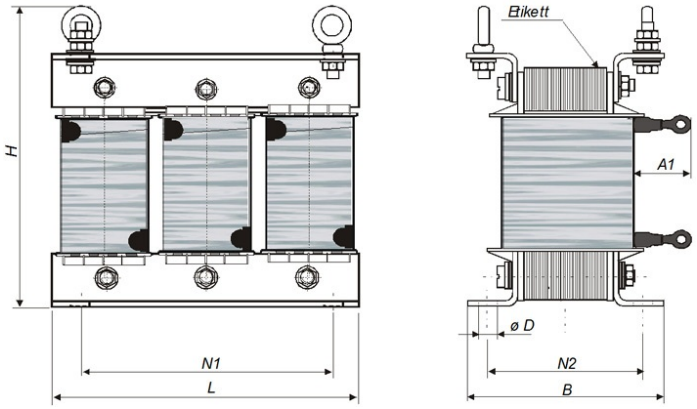

Image 4

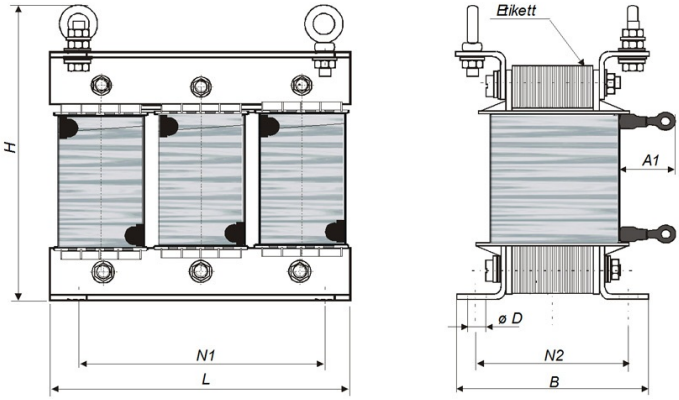

Image 5

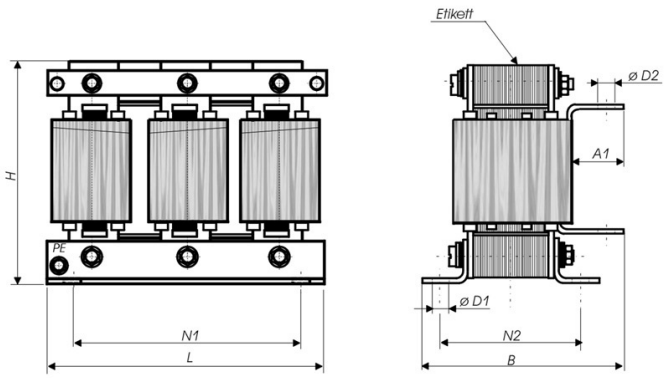

Last modified: 27.03.2018. All data is provided to the best of our knowledge and awareness and is subject to error and amendment.

Contatti REO Italia:
+39 030 279 3883 •
info@reoitalia.it

CNW 854

Three-phase motor choke

Dimensions

Type	Version	L [mm]	H [mm]	B [mm]	N1 [mm]	N2 [mm]	øD1 [mm]	A1 [mm]	Image	Conenction [mm2]
CNW 854/2		95	107	47	56	34	4.8 x 9	-	1	1.5
CNW 854/4		95	108	47	56	34	4.8 x 9	-	1	1.5
CNW 854/6		95	107	56	56	43	4.8 x 9	-	1	1.5
CNW 854/8		95	106	56	56	43	4.8 x 9	-	1	2.5
CNW 854/10		125	158	61	100	45	5 x 8	-	2	3
CNW 854/12		125	158	71	100	55	5 x 8	-	2	3
CNW 854/16		125	158	71	100	55	5 x 8	-	2	6
CNW 854/24		155	185	76	130	56	8 x 12	-	2	10
CNW 854/30		155	185	76	130	56	8 x 12	-	2	10
CNW 854/37		155	185	91	130	71	8 x 12	-	2	10
CNW 854/48		190	220	81	170	57	8 x 12	-	2	16
CNW 854/60		190	230	81	170	57	8 x 12	-	2	35
CNW 854/75		190	225	91	170	67	8 x 12	-	2	35
CNW 854/90		190	230	101	170	77	8 x 12	-	2	35
CNW 854/115		240	300	106	185	84	10 x 18	-	3	50
CNW 854/150		240	260	106	185	84	10 x 18	75	4	M12 95
CNW 854/180	Cu-Bar	340	292	162	248	110	10 x 18	37	5	11
CNW 854/200	Cu-Bar	300	263	200	224	145	10 x 18	39	5	11
CNW 854/250	Cu-Bar	300	262	209	224	155	10 x 18	39	5	11
CNW 854/300	Cu-Bar	360	311	181	264	137	10 x 18	39	5	11
CNW 854/350	Cu-Bar	360	310	199	264	142	10 x 18	49	5	13
CNW 854/400	Cu-Bar	360	312	214	264	157	10 x 18	49	5	13
CNW 854/500	Cu-Bar	360	309	224	264	167	10 x 18	49	5	13
CNW 854/600	Cu-Bar	420	364	213	316	144	13 x 20	59	5	13
CNW 854/700	Cu-Bar	420	365	246	316	174	13 x 20	59	5	13
CNW 854/800	Cu-Bar	420	477	256	316	174	13 x 20	69	5	2 x 13
CNW 854/900	Cu-Bar	420	474	264	316	174	13 x 20	79	5	2 x 13
CNW 854/1000	Cu-Bar	420	475	264	316	174	13 x 20	79	5	2 x 13
CNW 854/1200	Cu-Bar	420	479	274	316	184	13 x 20	79	5	2 x 13

Last modified: 27.03.2018. All data is provided to the best of our knowledge and awareness and is subject to error and amendment.