Contatti REO Italia:
+39 030 279 3883 •
info@reoitalia.it

CNW M 854

Fully encapsulated three-phase motor choke



Unique Selling Point

- Usable in rough environment
- Optimal mechanical protection of the choke
- Different fixings possibilities caused by 3 basic versions
- Assembly of different options: cables, terminals, terminal box
- Lower surface temperature
- Protection class up to IP 66
- Protection of electrical consumers
- Limitation of the voltage increase to <500V / us
- Extended service life of electrical consumers
- Reduction of engine noise
- Low leakage currents on the motor
- Longer motor cables possible
- Easy construction
- Compact design
- Production according to UL insulation system
  E251513 possible

Description

Voltage rise (<200V / us) and distortion reduce - protect electrical consumers optimally.

Motor chokes in fully encapsulated version are specially designed for rough environments and offer a very good mechanical protection of the component. The fully encapsulation allows design up to protection ratings IP 66.

Losses and heating are minimized and the leakage current reduced. Longer motor cable lengths are possible. By limiting the rate of voltage rise, the motor insulation is protected and thus prolongs the life. The motor choke also attenuates the conducted interference in lower frequency range very good. The losses and the typical noise in the motor plate can be reduced. Voltage rise (<200V / us) will be reduced.

Increasing the service life of motors, reduction of edge steepness dv/dt to earth and between phases, reduce motor noise, current smoothing.

- Rated voltage: U ≤ 3 x 500 V
- Reduce the voltage rise dv / dt to <200V / us
- Field frequency: 0 - 60 Hz
- Drive switching frequency: up to 150 A >4kHz, from 150 A >1,5KHz
- According to: EN 60289 / EN 61558
- Test voltage: L-L 2500 V, AC/50Hz 60s; L-PE 2500 V, AC/50Hz 60s
- Insulation class: T40/F
- Protection rating: IP00-IP65
- Climatic categorie: DIN IEC 60068-1
- Overload: 1,5 x INenn 1 min / h
- Ambient temperature: 40 °C
- Design: standing on foot angle

Typical applications

- Drive systems for motor drives:
  - Mechanical engineering
  - Elevators / escalators
  - Pipes
  - Conveyor technology
  - Ventilation and air conditioning
  - Robotics
  - Automation technology
- Power supplies
- Wind turbines

Technical Data

- Nominal Voltage : 500 V
- Rated current : 2 - 37 A
- Inductance per strand : 0,4 - 7 mH

Cirucit example

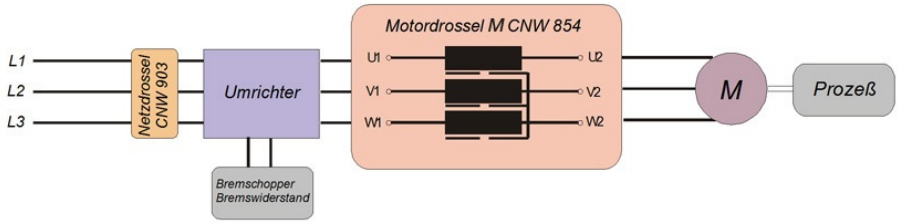

Last modified: 27.03.2018. All data is provided to the best of our knowledge and awareness and is subject to error and amendment.

Contatti REO Italia:
+39 030 279 3883 •
info@reoitalia.it

CNW M 854

Fully encapsulated three-phase motor choke

Technical data

Type	Rated voltage [V]	Rated current [A]	Inductance [mH]	Copper [kg]	Weight [kg]	Braid [mm²]
CNW M 854 / 2	up to 3 x 500	2	7,0	0,4	1,6	1,5
CNW M 854 / 4		4	3,6	0,4	1,6	1,5
CNW M 854 / 6		6	2,3	0,5	1,7	1,5
CNW M 854 / 8		8	2,0	0,5	1,7	1,5
CNW M 854 / 10		10	1,7	0,9	2,8	1,5
CNW M 854 / 12		12	1,1	1,1	3,7	1,5
CNW M 854 / 16		16	0,9	1,1	3,7	2,5
CNW M 854 / 24		24	0,8	1,7	4,6	4,0
CNW M 854 / 30		30	0,5	1,7	4,6	4,0
CNW M 854 / 37		37	0,4	2,1	7,2	6,0

Clock frequency of the frequency converter	Max. admissible cable length
Bis 16 kHz	50 m
Bis 8 kHz	150 m
Bis 4 kHz	200 m

Last modified: 27.03.2018. All data is provided to the best of our knowledge and awareness and is subject to error and amendment.

Contatti REO Italia:
+39 030 279 3883 •
info@reoitalia.it

CNW M 854

Fully encapsulated three-phase motor choke

Basic version 1

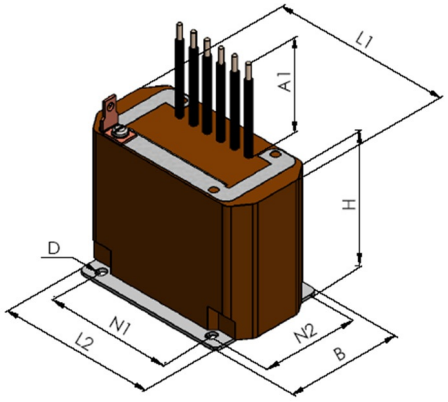

Basic version 2

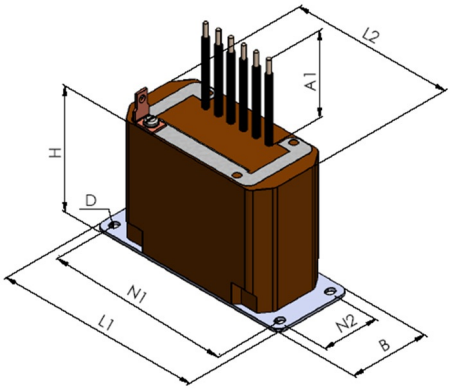

Basic version 3

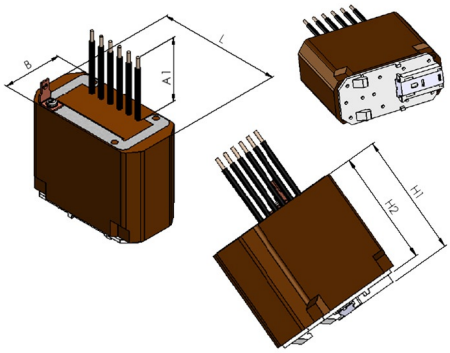

Type	Version	L [mm]	L1 [mm]	L2 [mm]	B [mm]	H [mm]	H1 [mm]	H2 [mm]	N1 [mm]	N2 [mm]	ø D [mm]	A1 [mm]
CNW M 854 / 2	1	-	115	100	65	88	-	-	80	51	5,5 x 7,0	200
CNW M 854 / 4	1	-	115	100	65	88	-	-	80	51	5,5 x 7,0	200
CNW M 854 / 6	1	-	115	100	74	88	-	-	80	60	5,5 x 7,0	200
CNW M 854 / 8	1	-	115	100	74	88	-	-	80	60	5,5 x 7,0	200
CNW M 854 / 10	1	-	140	125	77	113	-	-	100	60	5,5 x 7,0	200
CNW M 854 / 12	1	-	140	125	87	113	-	-	100	70	5,5 x 7,0	200
CNW M 854 / 16	1	-	140	125	87	113	-	-	100	70	5,5 x 12,0	200
CNW M 854 / 24	1	-	175	155	99	137	-	-	130	79	5,5 x 12,0	300
CNW M 854 / 30	1	-	175	155	99	137	-	-	130	79	5,5 x 12,0	300
CNW M 854 / 37	1	-	175	155	114	137	-	-	130	94	5,5 x 12,0	300
CNW M 854 / 2	2	-	155	115	47	88	-	-	140	26	5,5 x 7,0	200
CNW M 854 / 4	2	-	155	115	47	88	-	-	140	26	5,5 x 7,0	200
CNW M 854 / 6	2	-	155	115	56	88	-	-	140	35	5,5 x 7,0	200
CNW M 854 / 8	2	-	155	115	56	88	-	-	140	35	5,5 x 7,0	200
CNW M 854 / 10	2	-	180	140	51	113	-	-	165	30	5,5 x 7,0	200
CNW M 854 / 12	2	-	180	140	61	113	-	-	165	40	5,5 x 7,0	200
CNW M 854 / 16	2	-	180	140	61	113	-	-	165	40	5,5 x 12,0	200
CNW M 854 / 24	2	-	215	175	61	137	-	-	200	40	5,5 x 12,0	300
CNW M 854 / 30	2	-	215	175	61	137	-	-	200	40	5,5 x 12,0	300
CNW M 854 / 37	2	-	215	175	76	137	-	-	200	55	5,5 x 12,0	300
CNW M 854 / 2	3	115	-	-	47	-	97,5	91	-	-	-	200
CNW M 854 / 4	3	115	-	-	47	-	97,5	91	-	-	-	200
CNW M 854 / 6	3	115	-	-	56	-	97,5	91	-	-	-	200
CNW M 854 / 8	3	115	-	-	56	-	97,5	91	-	-	-	200
CNW M 854 / 10	3	140	-	-	51	-	122,5	116	-	-	-	200
CNW M 854 / 12	3	140	-	-	61	-	122,5	116	-	-	-	200
CNW M 854 / 16	3	140	-	-	61	-	122,5	116	-	-	-	200

Last modified: 27.03.2018. All data is provided to the best of our knowledge and awareness and is subject to error and amendment.

Contatti REO Italia:
+39 030 279 3883 •
info@reoitalia.it

CNW M 854

Fully encapsulated three-phase motor choke

Dimension drawings of the options

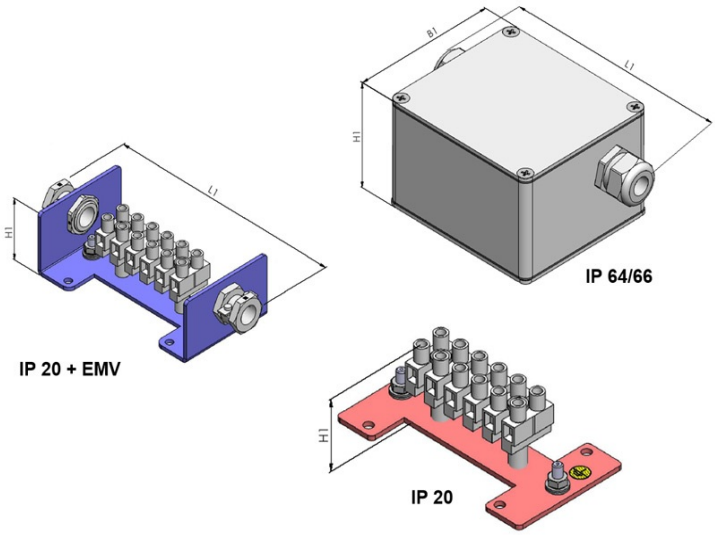

Dimensions of the options

	IP 20		IP 20 + EMV		IP 64			
Type	Terminals		Terminals + EMC – strain relief		Terminal box with EMC-screw connection			
	Cross section	H1 [mm]	H1 [mm]	L1 [mm]	Screw connection	L1 [mm]	B1 [mm]	H1 [mm]
CNW M 854 / 2	2,5	35	34	130	M 20	151	85	60
CNW M 854 / 4	2,5	35	34	130	M 20	151	85	60
CNW M 854 / 6	2,5	35	34	130	M 20	151	85	60
CNW M 854 / 8	2,5	35	34	130	M 20	151	85	60
CNW M 854 / 10	2,5	35	34	160	M 20	151	85	60
CNW M 854 / 12	2,5	35	34	160	M 20	151	85	60
CNW M 854 / 16	2,5	35	34	160	M 20	151	85	60
CNW M 854 / 24	6,0	35	35	172	M 25	155	85	60
CNW M 854 / 30	6,0	35	35	172	M 25	155	85	60
CNW M 854 / 37	6,0	35	35	172	M 32	210	120	80

Last modified: 27.03.2018. All data is provided to the best of our knowledge and awareness and is subject to error and amendment.

Contatti REO Italia:
+39 030 279 3883 •
info@reoitalia.it

CNW M 854

Fully encapsulated three-phase motor choke

Installation

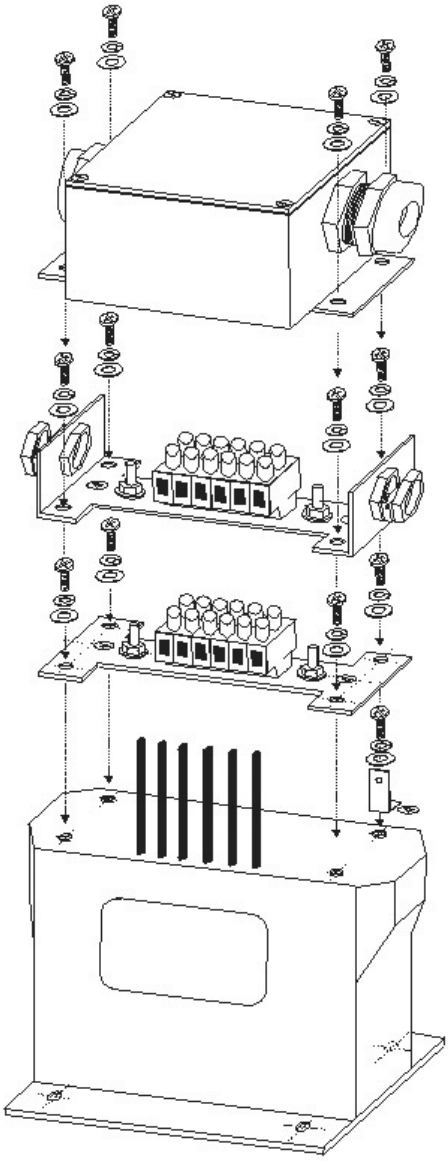

Assembly

for terminal connection in IP 64 enclosure with PE-screw connection for M4 and laterally assembled capacitor block (enclosed)

Assembly

for terminal connection with screen in IP 20 design with PE-screw connection for M4 and laterally assembled capacitor block

Assembly

for terminal connection in IP 20 design with PE-screw connection for M4 and laterally assembled capacitor block

Assembly

with cables with PE-plug-in connection 6,3 x 0,8 and laterally assembled capacitor block

Last modified: 27.03.2018. All data is provided to the best of our knowledge and awareness and is subject to error and amendment.