Contatti REO Italia:
+39 030 279 3883 •
info@reoitalia.it

# CNW M 833

*Fully encapsulated three-phase dv/dt Filter (IP20)*

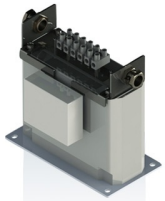

## Unique Selling Point

- Optimal mechanical protection of the choke
- Protection for electrical consumers
- Limit the voltage rise to < 500V/µs
- Extended service life of electrical consumers
- Low leakage currents on the motor
- Reduced losses
- Very low noise
- Easy construction
- Production possible according to UL insulation
  system E251513

## Description

Reduce voltage rice to < 500V/µs - electrical consumrs and insulation will protected with low costs.

A simple and inexpensive method for reducing the rate of voltage rise is to use a du / dt filter. The filter attenuates the voltage rise to acceptable values and prevents overvoltages on long supply lines. Losses and heating are minimized and reduces the leakage current. By limiting the rate of voltage rise, the motor insulation is protected and thus increases the service life.

Also, the electromagnetic interference can be reduced in the radiation range of 1 MHz to 30 MHz.

Voltage risers is reduced to < 500V/µs.

- Rated voltage: U ≤ 3 x 400 V
- Reduce the voltage rise dv / dt to < 500V/µs
- Max. cable length to the motor: 200 m
- Field frequency: 10 - 60 Hz
- Short circuit voltage at 400 V: 0.8%
- Drive switching frequency: 4 kHz > ft < 8 kHz
- According to: EN 60289 / EN 61558
- Test voltage: L-L 2500 V, AC/50Hz 60s; L-PE 2500 V, AC/50Hz 60s
- Insulation class: T40/F
- Protection rating: IP20
- Climatic categorie: DIN IEC 60068-1
- Overload: 1,5 x INenn 1 min / h
- Ambient temperature: 40 °C
- Design: standing on foot angle

Typical applications

- Drive systems for motor drives:
  - Mechanical engineering
  - Elevators / escalators
  - Pipes
  - Conveyor technology
  - Ventilation and air conditioning
  - Robotics
  - Automation technology
- Power supplies
- Wind turbines

## Technical Data

- Nominal Voltage : 400 V
- Rated current : 8 - 175 A
- Inductance : 0,09 - 2 mH

## Circuit example

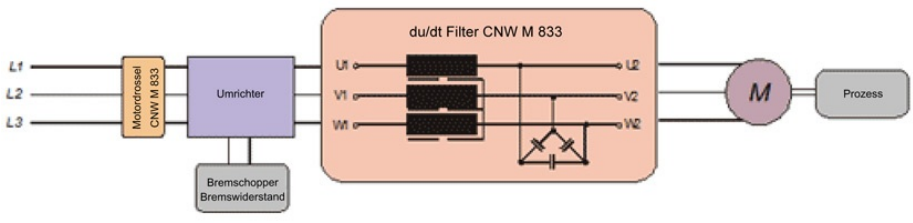


Last modified: 27.03.2018. All data is provided to the best of our knowledge and awareness and is subject to error and amendment.

Contatti REO Italia:
+39 030 279 3883 •
info@reoitalia.it

# CNW M 833

*Fully encapsulated three-phase dv/dt Filter (IP20)*

## Technical data

| Type | Rated voltage [V] | Rated current [A] | Inductance [mH] | Capacity [pF] | Weight [kg] | Clip [mm²] | Cable connection |
|---|---|---|---|---|---|---|---|
| CNW M 833 / 8 | 3 x 400 V ≤ 60 Hz | 8 | 2 | 330 | 3 | 2,5 | PG9 |
| CNW M 833 / 16 | | 16 | 0,9 | 330 | 4 | 6 | PG13,5 |
| CNW M 833 / 36 | | 36 | 0,42 | 330 | 8 | 16 | PG21 |
| CNW M 833 / 60 | | 60 | 0,27 | 2200 | 24 | 35 | PG29 |
| CNW M 833 / 90 | | 90 | 0,17 | 4700 | 27 | 35 | PG29 |
| CNW M 833 / 175 | | 175 | 0,09 | 10000 | 37 | 95 | PG42 |

Last modified: 27.03.2018. All data is provided to the best of our knowledge and awareness and is subject to error and amendment.

Contatti REO Italia:
+39 030 279 3883 •
info@reoitalia.it

# CNW M 833

*Fully encapsulated three-phase dv/dt Filter (IP20)*

## Dimension drawings

Design 1

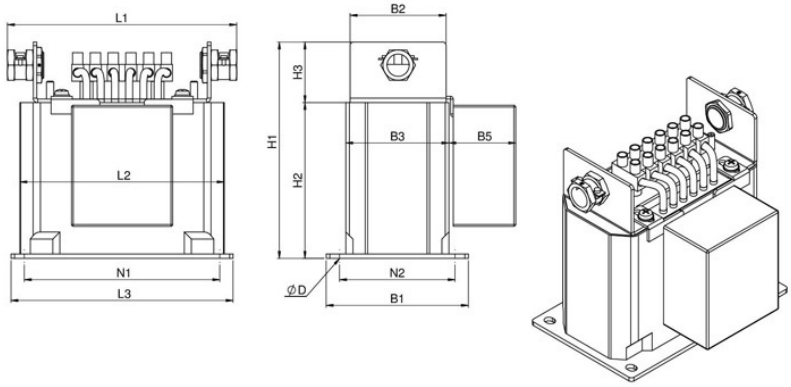


Design 2

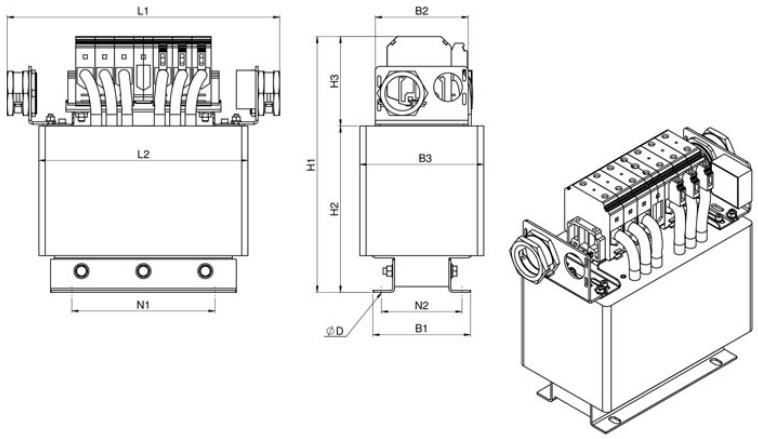


## Dimensions

| Type | L1 [mm] | L2 [mm] | L3 [mm] | B1 [mm] | B2 [mm] | B3 [mm] | B5 [mm] | H1 [mm] | H2 [mm] | H3 [mm] | N1 [mm] | N2 [mm] | D [mm] | Design |
|---|---|---|---|---|---|---|---|---|---|---|---|---|---|---|
| CNW M 833 / 8 | 160 | 140 | 150 | 80 | 50 | 55 | 35 | 150 | 110 | 37 | 135 | 65 | 5,5x7 | 1 |
| CNW M 833 / 16 | 160 | 140 | 170 | 85 | 60 | 65 | 35 | 150 | 110 | 35 | 155 | 70 | 5,5x7 | 1 |
| CNW M 833 / 36 | 185 | 175 | 175 | 115 | 70 | 80 | 30 | 185 | 140 | 45 | 155 | 95 | 5,5x15 | 1 |
| CNW M 833 / 60 | 295 | 249 | 255 | 180 | 80 | 120 | 35 | 300 | 218 | 82 | 185 | 150 | 9x13 | 1 |
| CNW M 833 / 90 | 295 | 250 | 255 | 180 | 90 | 120 | 40 | 300 | 218 | 82 | 185 | 150 | 9x13 | 1 |
| CNW M 833 / 180 | 355 | 270 | - | 127 | 120 | 160 | - | 335 | 217 | 116 | 185 | 105 | 10x18 | 2 |

Last modified: 27.03.2018. All data is provided to the best of our knowledge and awareness and is subject to error and amendment.