Your contact:
+49-(0)2 12-88 04-0 • info@reo.de

REOLAB 423

High voltage supply with AC-Output



Unique Selling Point

- Testing of AC and DC current converters with one unit
- Constant residual ripple over the entire adjustment range of the DC output
- Clean sine wave of the AC output voltage
- No EMC problems
- Control error approx. 1 % for AC and DC outputs
- Fast regulation of voltage variations
- Outputs protected against short-circuit and overload
- Doubled output current at half the DC voltage selectable
- True rms measurements with the digital meters
- System operation possible by means of a control panel not in the immediate vicinity of the HV supply unit
- Grounding possibility provided for the DC output
- Additional control of supplementary equipment possible via the control panel

Description

Applications:

The high-voltage supply unit is intended for testing current converters in the energy sector, as well as testing the entire auxiliary converters and switched power supply systems used in railway installations.

- Conforms to: VDE 0552
- Test voltage 3 kV for primary circuit
- Protection IP 20
- Ambient temperature: 40 °C

Technical Data

- Input voltage : 3x400 V
- Rated power : 0 - 150 kW/kVA

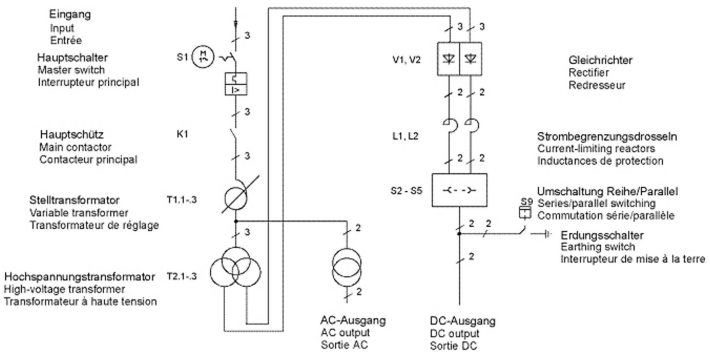

Features:

- Power switch with magnetic and thermal cut-out in the mains input circuit
- Main contactor for operational switching of transformers
- Emergency Off switch and safety loop with warning lamps
- Air-operated short-circuiting and grounding switch for the DC output
- Viewing window for DC analog voltmeter and air-operated breaker
- Analog meters for V & A in the mains supply (96 x 96 mm format)
- Digital meters for V & A in the AC/DC output (96 x 48 mm format)
- Analog meters for the DC output
- Electronically-controlled voltage stabilization
- Forced zero-position for the variable transformer
- Output protected against short-circuit and overload
- Selectable DC output voltage range
- Discharge circuit for external DC link capacitor
- Pushbutton and indicator lamp (22 mm Ø) for operation

Last modified: 27.03.2018. All data is provided to the best of our knowledge and awareness and is subject to error and amendment.

Your contact:
+49-(0)2 12-88 04-0 • info@reo.de

REOLAB 423

High voltage supply with AC-Output

REOLAB 123/150	Rated voltage [V]	Rated power [kW/kVA]	Output voltage [V] DC/AC	Output current [A] DC/AC	Connection
DC Output	3 x 400	0 – 150	2 x 0 – 2500 bzw. 0 – 5000	60 bzw. 30	Delta/star/star 2 x B6U
AC Output	50 / 60 Hz	0 - 144	0 - 430	335	Ii0

Regulation time: about 25 sec for the full control range

Surface finish: RAL 7035 or 7032

Natural cooling

Required air pressure: about 6 bar

Remote operation

The HV supply unit is operated by means of a 19“ remote control panel, which is plugged into the HV supply unit via a 10 m long flexible cable and connector.
The viewing window for the grounding switch provides additional safety.

Last modified: 27.03.2018. All data is provided to the best of our knowledge and awareness and is subject to error and amendment.

Your contact:
+49-(0)2 12-88 04-0 • info@reo.de

REOLAB 423

High voltage supply with AC-Output

Dimension drawing

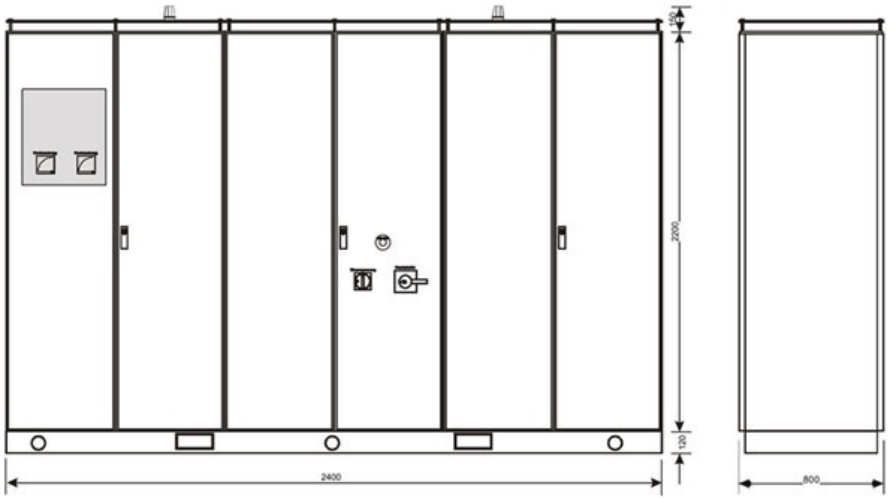

Remote operation

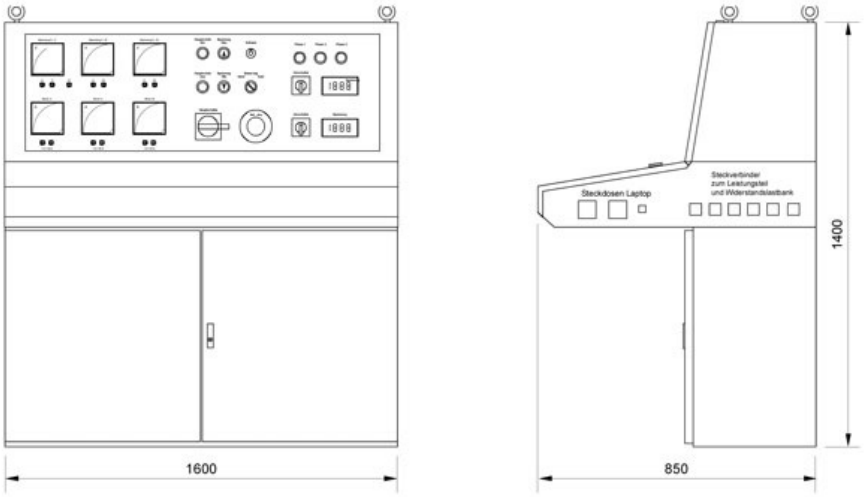

Last modified: 27.03.2018. All data is provided to the best of our knowledge and awareness and is subject to error and amendment.