Contatti REO Italia:
+39 030 279 3883 •
info@reoitalia.it

NTT MD 953

Liquid-cooled three-phase mains choke 8% Uk

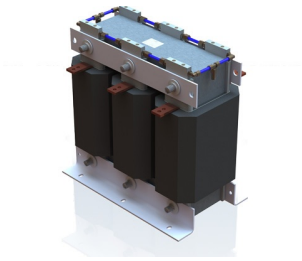

Unique Selling Point

- Protection class up to IP 65
- Longer lifetime
- Optimal heat dissipation
- Suitable for railway applications

Description

Watercooled chokes are available are available with ingress protection ratings IP00 to IP65. REO can utilise several methods of water cooling these components. This provides controlled conduction of heat losses, ensuring that the local environment is not heated. Water cooling ensures that component temperatures are greatly reduced, reducing component stress and increasing product life. REO technology provides excellent heat distribution, preventing the emergence of so-called hot spots.

- Winding material : Aluminum
- Insulation class: F
- Cooling medium: Water/Glycol (70/30 %)
- Max. coolant inlet temperature.: 50° C
- Flow rate: min. 3,6 l/min.
- Pressure drop: <0,5 bar

Typical applications

- AFE Drives

Technical Data

- Nominal Voltage : 400 V
- Rated current : 200 - 1200 A
- Inductance : 0,012 - 0,074 mH

Last modified: 27.03.2018. All data is provided to the best of our knowledge and awareness and is subject to error and amendment.

Contatti REO Italia:
+39 030 279 3883 •
info@reoitalia.it

NTT MD 953

Liquid-cooled three-phase mains choke 8% Uk

Technical data

Type	Rated voltage [V]	Rated current [A]	Uk	Linear up to	Inductance [µH]	R20 [mΩ]	Windings weight [kg]
NTT MD 953/200	3 x 400 (optional 3x690)	200	8%	300	74	2,1	7
NTT MD 953/400		400		600	37	0,96	11
NTT MD 953/600		600		900	25	0,49	15
NTT MD 953/800		800		1200	18	0,4	19
NTT MD 953/1000		1000		1500	15	0,3	18
NTT MD 953/1200		1200		1800	12	0,18	32

Last modified: 27.03.2018. All data is provided to the best of our knowledge and awareness and is subject to error and amendment.

Contatti REO Italia:
+39 030 279 3883 •
info@reoitalia.it

NTT MD 953

Liquid-cooled three-phase mains choke 8% Uk

Dimension drawings

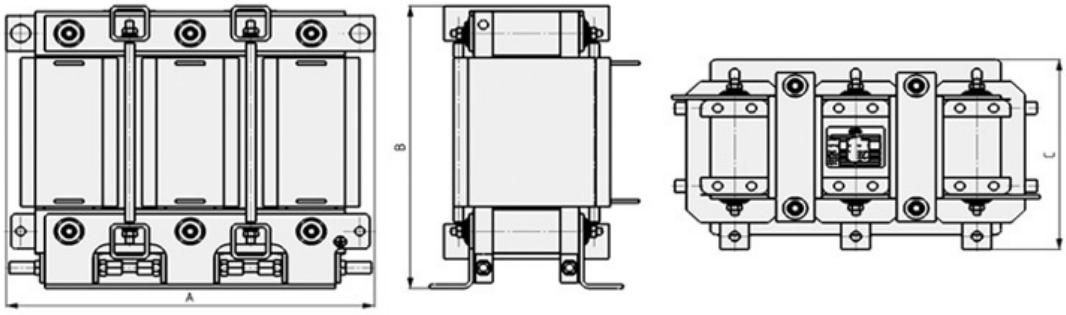

Dimensions

Type	A [mm]	B [mm]	C [mm]	Weight [kg]
	Braced			
NTT MD 953/200	380	320	250	70
NTT MD 953/400	390	380	260	95
NTT MD 953/600	420	505	325	140
NTT MD 953/800	530	550	295	175
NTT MD 953/1000	510	590	335	225
NTT MD 953/1200	530	675	335	260
	Unbraced			
NTT MD 953/200	380	312	250	68
NTT MD 953/400	390	372	260	93
NTT MD 953/600	420	478	325	133
NTT MD 953/800	530	523	295	168
NTT MD 953/1000	510	563	335	218
NTT MD 953/1200	530	646	335	253

Last modified: 27.03.2018. All data is provided to the best of our knowledge and awareness and is subject to error and amendment.