Contatti REO Italia:
+39 030 279 3883 •
info@reoitalia.it

UNIMED

Transformers



Unique Selling Point

- Very low leakage current
- Very high efficiency
- Conforms to medical standard EN 60601-1
- Standard connections ensure straightforward integration
- High capacity
- No hum
- Low power losses
- Reduced magnetic stray field
- Easy installation

Description

The REO UNIMED can be configured to use many different input voltage combinations, ensuring safety standards can be maintained on a world-wide basis.

The UNIMED series are designed for installation in a compact housing or on mounting plates. The units have safe terminals for easy connection. The special winding design ensures a safe separation of primary and secondary circuits and compliance with the required air and creepage distances.

Application area:

- Medical systems

Technical Data

- Rated power : 100 - 300 VA

Contatti REO Italia:
+39 030 279 3883 •
info@reoitalia.it

UNIMED

Transformers

UNIMED	100	150	200	250	300
Rated power [VA]	100	150	200	250	300
Input voltage [V]	0-115 / 0-100-115	0-115 / 0-100-115	0-115 / 0-100-115	0-115 / 0-100-115	0-115 / 0-100-115
Mains frequency [Hz]	50/60	50/60	50/60	50/60	50/60
Output voltage [V]	230	230	230	230	230
Current [A]	0,43	0,65	0,87	1,09	1,30
Cu weight [kg]	0,6	0,8	0,9	1,05	1,2
Total weight [kg]	1,9	1,9	3,2	3,2	3,2
Test voltage	4 kV	4 kV	4 kV	4 kV	4 kV
Standard	EN 60601-1 / IEC 601-1 / UL 2601.1				
Max. ambient temperature	40 °C	40 °C	40 °C	40 °C	40 °C
Protection IP housing	IP54	IP54	IP54	IP54	IP54

Last modified: 25.02.2019. All data is provided to the best of our knowledge and awareness and is subject to error and amendment.

Contatti REO Italia:
+39 030 279 3883 •
info@reoitalia.it

UNIMED

Transformers

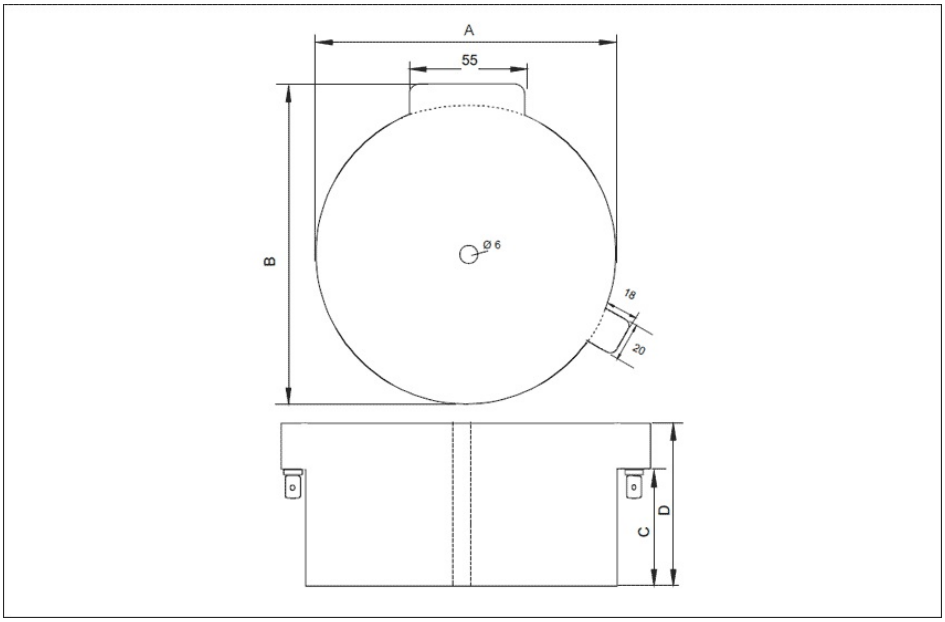

Type	A (mm)	B (mm)	C (mm)	D (mm)	Attachment plug flag
UNIMED 100	110	125	30	50	6,3x0,8
UNIMED 150	110	125	30	50	6,3x0,8
UNIMED 200	110	125	60	80	6,3x0,8
UNIMED 250	110	125	60	80	6,3x0,8
UNIMED 300	110	125	60	80	6,3x0,8

Last modified: 25.02.2019. All data is provided to the best of our knowledge and awareness and is subject to error and amendment.