Contatti REO Italia:
+39 030 279 3883 •
info@reoitalia.it

PROMED I

Transformers

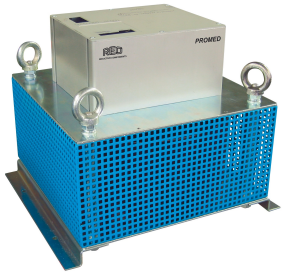

Unique Selling Point

- Very low leakage current
- Very high efficiency
- Conforms to medical standard EN 60601-1
- Standard connections ensure straightforward integration
- High capacity
- No hum
- Low power losses
- Reduced magnetic stray field
- Easy installation

Description

The PROMED isolation transformers are constructed for central power supply in medical systems and provide high single-phase
powers ranging from 3150VA up to 8000 VA. The transformers are also available in three-phase versions.

Application area:

- Medical systems
- Operating theatres

Technical Data

- Rated power : 3150 - 8000 VA
- Input voltage : 230V / 400 V

Last modified: 26.02.2019. All data is provided to the best of our knowledge and awareness and is subject to error and amendment.

Contatti REO Italia:
+39 030 279 3883 •
info@reoitalia.it

PROMED I

Transformers

PROMED I	3150	4000	5000	6300	8000
Rated power [VA]	3150	4000	5000	6300	8000
Input voltage [V]	230 / 400	230 / 400	230 / 400	230 / 400	230 / 400
Mains frequency [Hz]	50/60	50/60	50/60	50/60	50/60
Output voltage [V]	230	230	230	230	230
Rel. short-circuit voltage [%]	≤3	≤3	≤3	≤3	≤3
No-load current [A]	≤3	≤3	≤3	≤3	≤3
Current [A]	14,3	18,1	22,7	28,6	36,3
Cu weight [kg]	9,1	11,6	16,4	19,0	21,0
Total weight [kg]	19	24	29	34	41
Test voltage	4 kV	4 kV	4 kV	4 kV	4 kV
Standard	EN 60601-1 / EN 61558-2-4				
Max. ambient temperature	40 °C	40 °C	40 °C	40 °C	40 °C
Protection IP housing	IP52	IP52	IP52	IP52	IP52
protection class	I	I	I	I	I
mode of operation	DB	DB	DB	DB	DB

Last modified: 26.02.2019. All data is provided to the best of our knowledge and awareness and is subject to error and amendment.

Contatti REO Italia:
+39 030 279 3883 •
info@reoitalia.it

PROMED I

Transformers

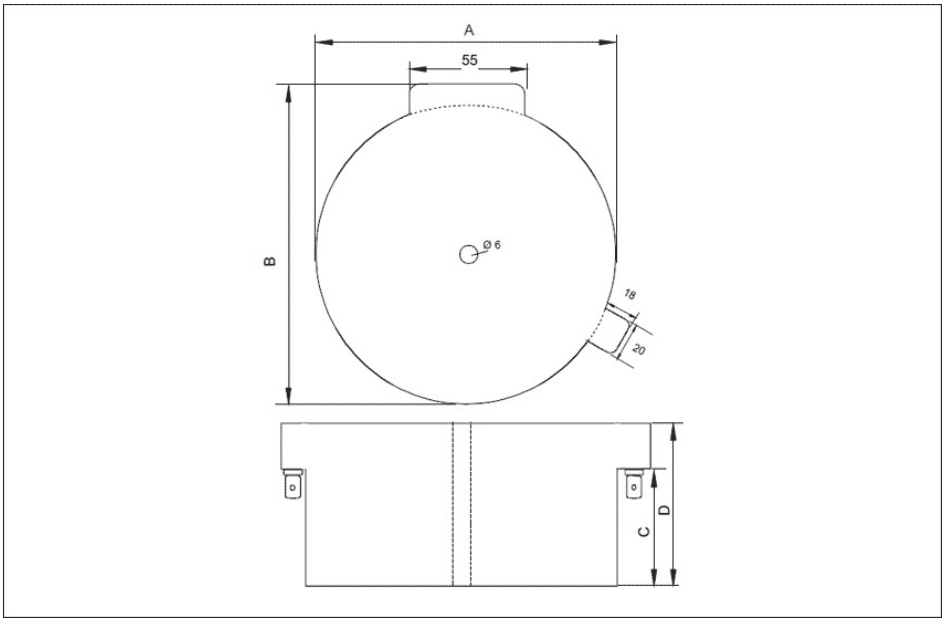

Type	A (mm)	B (mm)	T (mm)	H (mm)
PROMED 1-3150	350	300	300	315
PROMED 1-4000	350	300	300	315
PROMED 1-5000	350	300	300	315
PROMED 1-6300	350	300	300	360
PROMED 1-8000	350	300	300	360

Last modified: 26.02.2019. All data is provided to the best of our knowledge and awareness and is subject to error and amendment.