Contatti REO Italia:
+39 030 279 3883 •
info@reoitalia.it

CNW 107.3/480

High-current mains filters (3 lines)

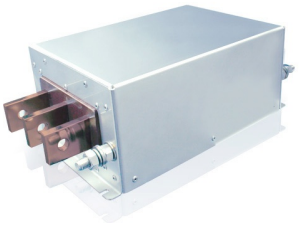

Unique Selling Point

- specifically desiged for high performances
- suitable for offshore applications
- compact design
- good heat dissipation
- rail connector
- fast installation

Description

Applications: Suppression of frequency inverters, Power electronics and general suppression for higher power ratings on wind energy and industrial applications.

- Conforming to: VDE 0565-3 / IEC 950 / UL 1283
- Test voltage: L-N 2100 V,DC 1s, L/N-PE 2700 V,DC 1s
- Overload: 1,5 x I 1 min/h
- Climatic category: DIN IEC 68 Teil 1 25/085/21

Technical Data

- Nominal Voltage : 480 V
- Rated current : 280 - 3000 A

The EMC filter is specifically for the suppression of high-current applications in wind energy and industrial applications designed. This filter series is for the voltage levels of 480V and 690V constructed.The filter can be delivered in various casing versions. So it can be adapted to different environmental conditions.
There are also versions for offshore applications possible.

Circuit example

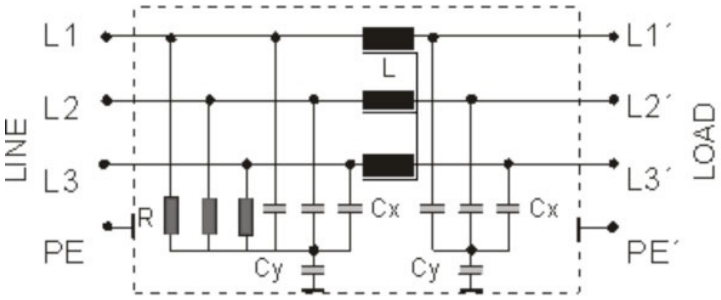

Last modified: 27.03.2018. All data is provided to the best of our knowledge and awareness and is subject to error and amendment.

Contatti REO Italia:
+39 030 279 3883 •
info@reoitalia.it

CNW 107.3/480

High-current mains filters (3 lines)

Technical data

Type	Rated voltage [V]	Rated current [A]	Leakage current [mA]	L [µH]	SCx [µF]	SCy [µF]
CNW 107.3/280	3 x 480 / 690	3 x 280	<300	100	40	3,8
CNW 107.3/500		3 x 500	<300	100	40	3,8
CNW 107.3/700		3 x 700	<300	100	40	3,8
CNW 107.3/1000		3 x 1000	<300	100	40	3,8
CNW 107.3/1600		3 x 1600	<500	44	50	7,6
CNW 107.3/2500		3 x 2500	<500	44	50	7,6
CNW 107.3/3000		3 x 3000	<500	40	50	7,6

Last modified: 27.03.2018. All data is provided to the best of our knowledge and awareness and is subject to error and amendment.

Contatti REO Italia:
+39 030 279 3883 •
info@reoitalia.it

CNW 107.3/480

High-current mains filters (3 lines)

Dimensions

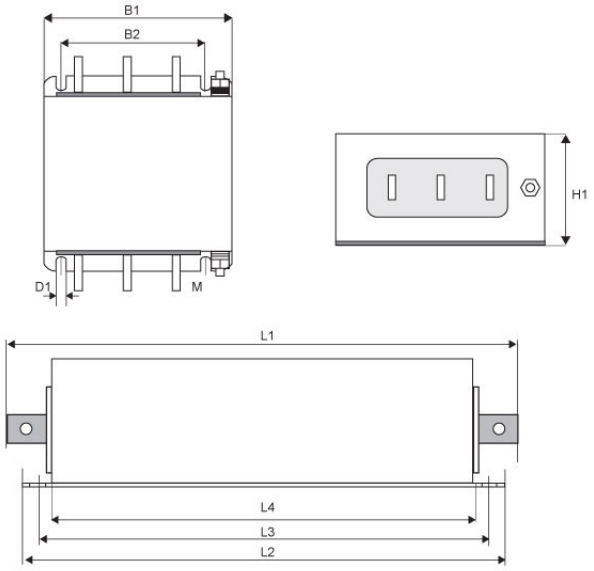

Type	Connection	PE-Connection	L1 [mm]	L2 [mm]	L3 [mm]	L4 [mm]	B1 [mm]	B2 [mm]	H1 [mm]
CNW 107.3/280	30x5	M12	420	335	320	296	220	175	135
CNW 107.3/500	40x5	M12	420	335	320	296	220	175	135
CNW 107.3/700	40x10	M12	420	335	320	296	220	175	135
CNW 107.3/1000	40x10	M12	420	335	320	296	220	175	135
CNW 107.3/1600	50 x 10	M12	590	406	340	360	330	300	180
CNW 107.3/2500	80 x 15	M12	590	406	340	360	330	300	180
CNW 107.3/3000	120 x 15	M12	700	506	400	420	390	360	240

Last modified: 27.03.2018. All data is provided to the best of our knowledge and awareness and is subject to error and amendment.

Contatti REO Italia:
+39 030 279 3883 •
info@reoitalia.it

CNW 107.3/480

High-current mains filters (3 lines)

Typical attenuation

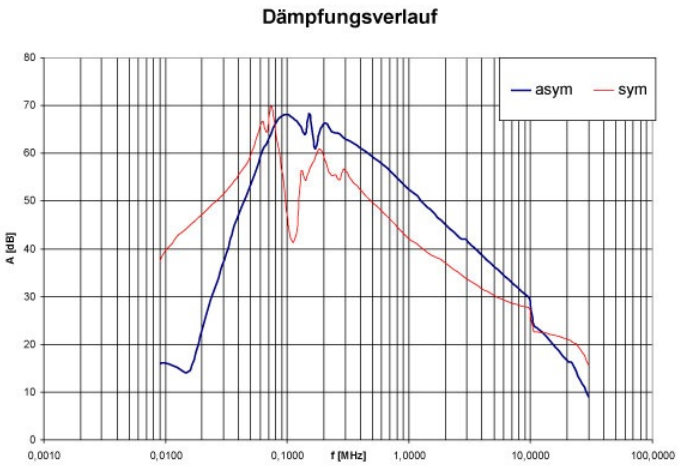

Last modified: 27.03.2018. All data is provided to the best of our knowledge and awareness and is subject to error and amendment.