Contatti REO Italia:
+39 030 279 3883 •
info@reoitalia.it

CNW 8981-50 Hz

REOWAVEpassive - harmonic filter 50 Hz/400V (IP20)



Unique Selling Point

In additon to providing excellent harmonic fi ltering performance, the REOWAVEpassive can also besupplied with these additional options:

- Overcurrent indication signals
- Temperature monitoring
- Floating signalling contacts
- Automatic disconnection of the fi lter in the event of a system problem
- Reduction of the THDI value
- Increasing network stability
- Reduction of input current up to 30%
- Suitable for installation in control cabinets
- Easy integration into existing systems
- Increased reliability of electrical installations
- Optional with overcurrent signal to monitor the filter effect

The options allow optimisation of the mains network quality and overall system security and allow better monitoring by a PLC or supervisory system.

Description

Reduce Harmonics - save up to 30% energy costs.

The REOWAVE®passive filters harmonics caused by the B6 circuit (thyristor, diode bridge, etc.) and motor drives. The supply network is relieved by compensating the harmonics reactive power. This enables cost savings in material selection and energy consumption. Starting currents and current peaks are greatly attenuated.

This increases the service life and reliability of electrical systems. Due to the compact and ready-build an easy installation is possible.

The REOWAVE®passive helps to comply with international power quality standards IEEE 519 or EN 61000-3.

- Nominal voltage: 400V
- Frequency: 50Hz
- In accordance with: EN 60289 / EN 61558
- Test voltage: L-L 2500 V, DC 1min; L-PE 2500 V, DC 1min
- Insulation class: T40 / F
- Climate class: IEC 60068-1 DIN
- Protection: IP 20 (also available as IP00 version)
- Nominal voltage: 400V / 50 Hz
- Standards: IEEE 519, EN 61000-3-12, EN 61000-3-2, IEC 61000-3-4

Technical Data

- Nominal Voltage : 400 V
- Rated current : 6 - 1200 A
- Frequency : 50 Hz

Typical applications:

- Drive technology for motor drives, e.g.:
- Engineering
- Elevators / escalators
- Pipe
- Conveyor Technology
- Ventilation and air conditioning
- Robotics
- Automation Technology
- Power Supplies
- Failsafe processes
- Applications with a 6- pulse rectifier

Circuit example

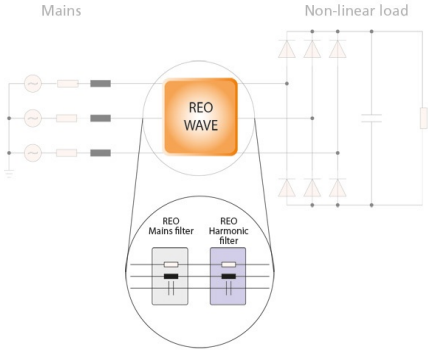

Last modified: 27.03.2018. All data is provided to the best of our knowledge and awareness and is subject to error and amendment.

Contatti REO Italia:
+39 030 279 3883 •
info@reoitalia.it

CNW 8981-50 Hz

REOWAVEpassive - harmonic filter 50 Hz/400V (IP20)

Technical data / Dimensions

Type	Rated current [A]	Power losses [W]	L [mm]	B [mm]	H/H1 [mm]	H2 [mm]	N1 [mm]	N2 [mm]	N3 [mm]	D [mm]	Weight [kg]	Terminals [mm²]	Image
CNW 8981/6	6	95	570	240	175	-	545	150	-	9	20	10	1
CNW 8981/9	9	120	570	240	175	-	545	150	-	9	25	10	1
CNW 8981/12	12	120	570	240	175	-	545	150	-	9	30	10	1
CNW 8981/16	16	160	670	275	175	-	645	200	-	9	35	10	2
CNW 8981/22	22	230	670	275	175	-	645	200	-	9	40	10	2
CNW 8981/32	32	241	820	340	175	-	795	250	-	9	50	10	2
CNW 8981/36	36	300	820	340	175	-	795	250	-	9	50	10	2
CNW 8981/45	45	313	1000	360	260	-	925	298	50	13	65	16	3
CNW 8981/55	55	420	1000	360	260	-	925	298	50	13	65	16	3
CNW 8981/70	70	487	1000	360	260	-	925	298	50	13	80	16	3
CNW 8981/90	90	580	765	475	520	-	675	316	-	13	125	50	4
CNW 8981/110	110	710	765	475	520	-	675	316	-	13	175	50	4
CNW 8981/145	145	860	765	475	520	-	675	316	-	13	200	50	4
CNW 8981/180	180	1000	600	600	1800	200	-	-	-	-	340	-	5
CNW 8981/200	200	1100	600	600	1800	200	-	-	-	-	345	-	5
CNW 8981/230	230	950	600	600	1800	200	-	-	-	-	352	-	5
CNW 8981/270	270	1140	600	600	1800	200	-	-	-	-	370	-	5
CNW 8981/330	330	1570	600	600	2000	200	-	-	-	-	427	-	5
CNW 8981/370	370	1680	600	600	2000	200	-	-	-	-	427	-	5
CNW 8981/400	400	1410	600	600	2000	200	-	-	-	-	442	-	5
CNW 8981/450	450	1500	600	600	2000	200	-	-	-	-	473	-	5
CNW 8981/550	550	1850	800	800	2000	200	-	-	-	-	540	-	5
CNW 8981/650	650	2090	800	800	2000	200	-	-	-	-	597	-	5
CNW 8981/800	800	2510	1200	800	2000	200	-	-	-	-	790	-	6
CNW 8981/1000	1000	2650	1200	800	2000	200	-	-	-	-	895	-	6
CNW 8981/1200	1200	3030	1200	800	2000	200	-	-	-	-	990	-	6

Last modified: 27.03.2018. All data is provided to the best of our knowledge and awareness and is subject to error and amendment.

Contatti REO Italia:
+39 030 279 3883 •
info@reoitalia.it

CNW 8981-50 Hz

REOWAVEpassive - harmonic filter 50 Hz/400V (IP20)

Dimension drawings

Image 1

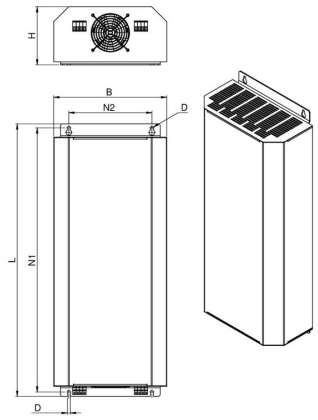

Image 2

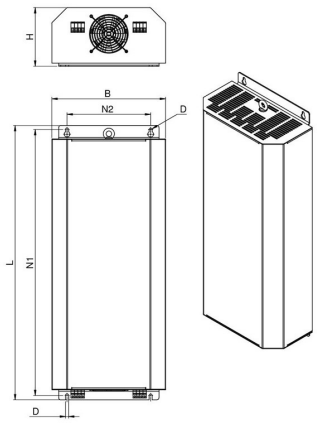

Image 3

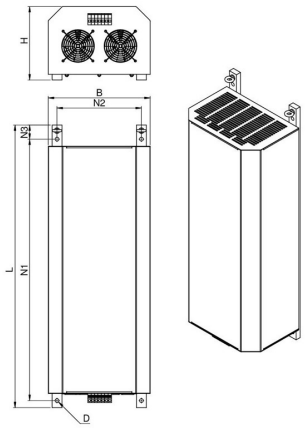

Image 4

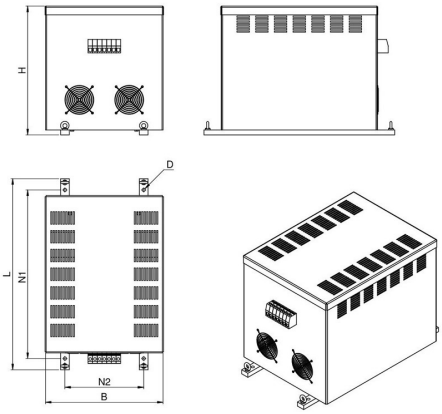

Image 5

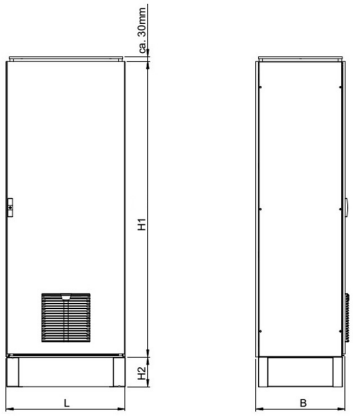

Image 6

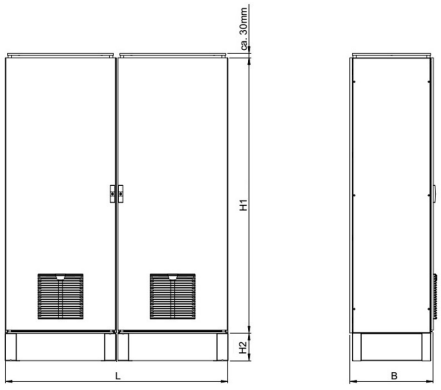

Last modified: 27.03.2018. All data is provided to the best of our knowledge and awareness and is subject to error and amendment.

Contatti REO Italia:
+39 030 279 3883 •
info@reoitalia.it

CNW 8981-50 Hz

REOWAVEpassive - harmonic filter 50 Hz/400V (IP20)

REOWAVE®passive

Save money with less reactive power

In the course of rising energy costs and growing CO2 emissions minimizing losses in the transmission grid gains more and more importance. An important factor are the reactive currents. These currents do not contribute to the effective power, but stress all components in the current path and cause additional losses to the ohmic resistance component of the lead. Reactive currents are, for example, harmonics caused by the usage of frequency.

However, reducing the energy efficiency is not only a burden on the environment because more energy is consumed for a steady performance - at the same time the costs increase for the operator of the installations, as they have to pay the reactive power.

Mains chokes, DC chokes or Harmonicfilter of REO filter unwanted harmonics and help to counteract the resulting reactive current. Thus, the reactive power is diminished, the energy requirement and the running costs are reduced.

Measurements at a frequency converter of 22 kW to the motor shaft

	unfiltered	1% Uk-mains choke	2% Uk-mains choke	4% Uk-mains choke	REOWAVE passive
I_{input} [A]	42,4	41,6	37,7	35,8	32,0
Q [kvar]	19,6	18,0	15,2	10,2	2,5

Current and power factor at a REOWAVEpassive CNW 8981 / 6 -1200A / 400V / 50Hz

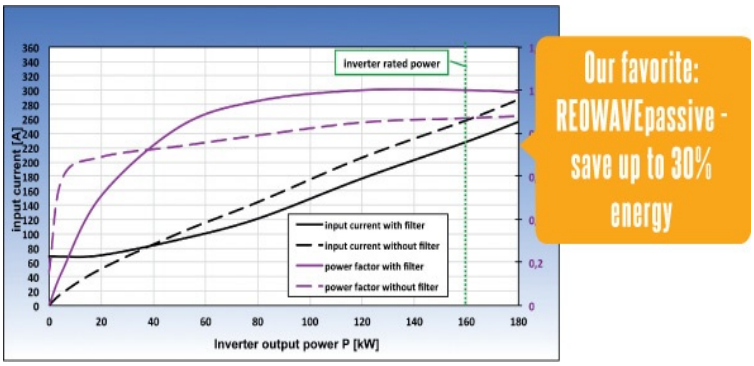

Last modified: 27.03.2018. All data is provided to the best of our knowledge and awareness and is subject to error and amendment.

Contatti REO Italia:
+39 030 279 3883 •
info@reoitalia.it

CNW 8981-50 Hz

REOWAVEpassive - harmonic filter 50 Hz/400V (IP20)

NEW! Overcurrent signal to monitor the filter effect

The REO overcurrent indication signals at anytime your energy efficiency.
You can track your power consumption:

- GREEN = power consumption about 80% (based on the rated current of the filter)
- YELLOW= power consumption about 100% (based on the rated current of the filter)
- RED= power consumption above 105% (based on the rated current of the filter)



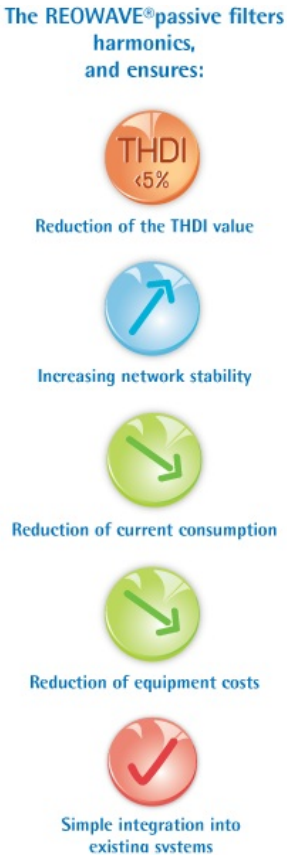

Temperature monitoring

Bespoke electronics monitor the operating temperature of the inductive components, used within the fi lter. If these exceed the safe operating temperature, a potential-free contact will indicate this.

Disconnection of the fi lter function in case of failure

If an overtemperature condition is discovered the mains is automatically disconnected after a pre-determined delay in order to avoid permenant system damage. All error messages are reset when the power is again returned to the rated operating condition.

Optionally with corresponding plugs and sockets for immediate use without large installations, - like that, immediate beginning of the savings !

Last modified: 27.03.2018. All data is provided to the best of our knowledge and awareness and is subject to error and amendment.