Your contact:
+49-(0)2 12-88 04-0 • info@reo.de

REOLAB 312

REO three-phase laboratory power supply for continuously variable voltage



Unique Selling Point

- Low voltage drop and low short-circuit impedance
- Clean sine wave of the AC output
- Precise output adjustment through built-in digital indicators
- Low space requirement

Description

Applications:

The AC laboratory power supply is required in every test bay, laboratory or quality assurance department for test and development purposes. The device under test can be operated with a variable supply, thus permitting overvoltage and undervoltage tests to be conducted, as well as endurance tests.

Features

- Master switch with low-voltage trip
- Mains filter
- Inrush current limiting
- Power contactor in the output
- Analog voltage and current meters
- Selector switch for voltage and current meters
- Automatic circuit breaker
- Illuminated pushbutton for secondary output
- Safety laboratory sockets

Technical Data

- Input voltage : 3x400 V
- Output voltage : 3x0 - 450 V
- Output Current : 3x18 A

Last modified: 27.03.2018. All data is provided to the best of our knowledge and awareness and is subject to error and amendment.

Your contact:
+49-(0)2 12-88 04-0 • info@reo.de

REOLAB 312

REO three-phase laboratory power supply for continuously variable voltage

Type	Rated voltage [V]	Rated power [kVA]	Output voltage [V] AC	Output current [A] AC	Connection
REOLAB 312/14 AC output	3 x 400 50 / 60 Hz	max. 14	3 x 0 – 450	3 x 18	Star / Auto

Surface finish: RAL 7035/5018
Admitted max. ambient temp.: 40 °C
Natural cooling

Options:
• Digital voltage and current meters • External connection for emergency Off circuit • External connection of warning lamps • 3 voltage and current meters per phase

Last modified: 27.03.2018. All data is provided to the best of our knowledge and awareness and is subject to error and amendment.

Your contact:
+49-(0)2 12-88 04-0 • info@reo.de

REOLAB 312

REO three-phase laboratory power supply for continuously variable voltage

Dimension drawing

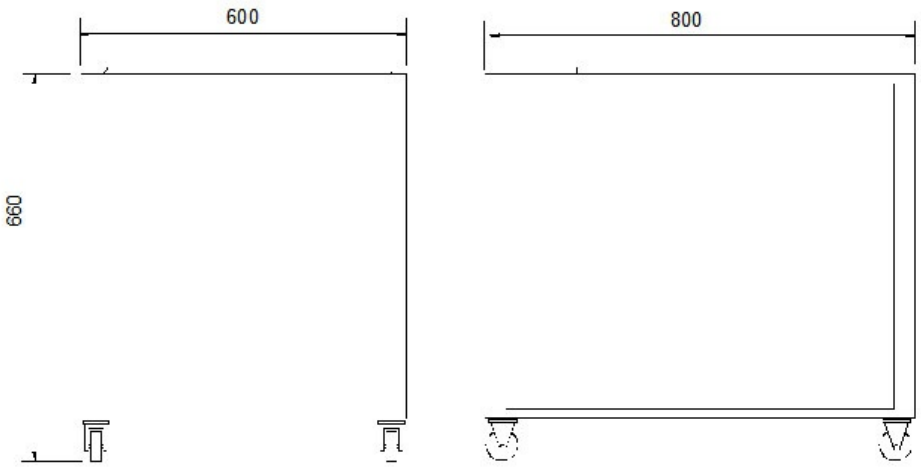

Last modified: 27.03.2018. All data is provided to the best of our knowledge and awareness and is subject to error and amendment.

Your contact:
+49-(0)2 12-88 04-0 • info@reo.de

REOLAB 312

REO three-phase laboratory power supply for continuously variable voltage

Block diagram

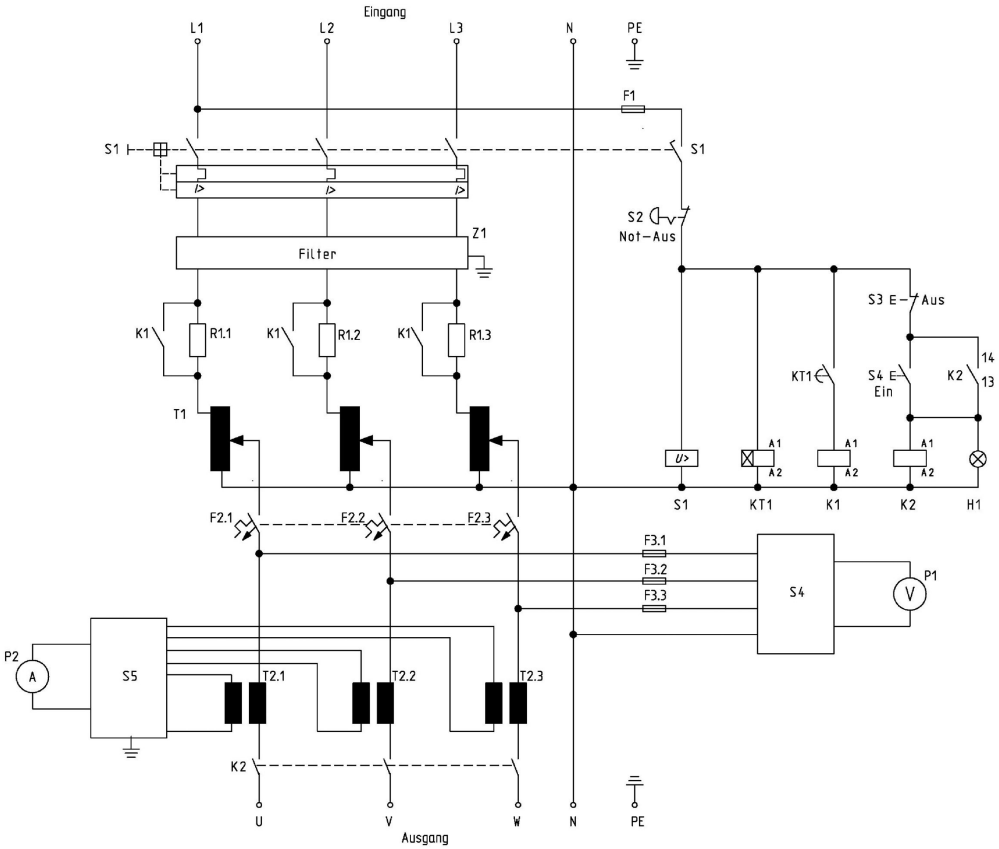

Last modified: 27.03.2018. All data is provided to the best of our knowledge and awareness and is subject to error and amendment.