Contatti REO Italia:
+39 030 279 3883 •
info@reoitalia.it

# CNW 806

*Three-phase-dv/dt filter*



## Unique Selling Point

- Protection for electrical consumers
- Limitation of the voltage rise on <500V / us
- Extended service life of electrical consumers
- Low leakage currents on the motor
- Reduced losses
- Easy construction
- Compact design
- Production according to UL insulation system E251513 possible

## Description

Reduce voltage rice to < 500V/µs - electrical consumrs and insulation will protected with low costs.

A simple and inexpensive method for reducing the rate of voltage rise is to use a du / dt filter or throttle. It dampens the voltage rise to acceptable values and prevents overvoltages on long supply lines.

Losses and heating are minimized and the leakage current reduced. By limiting the rate of voltage rise, the motor insulation is protected and thus prolongs the life.

Also, the electromagnetic interference can be reduced in the radiation range of 1 MHz to 30 MHz.

- Rated voltage: U ≤ 3 x 500 V
- Reduce voltage rice to < 500V/µs
- Field frequency: 0 - 60 Hz
- Drive switching frequency: up to 150 A >4kHz, from 150 A >1,5KHz
- According to: EN 60289 / EN 61558
- Test voltage: L-L 2500 V, AC/50Hz 60s; L-PE 2500 V, AC/50Hz 60s
- Insulation class: T40/F
- Protection rating: IP00
- Climatic categorie: DIN IEC 60068-1
- Overload: 1,5 x INenn 1 min / h
- Ambient temperature: 40 °C
- Design: standing on foot angle

Typical applications

- Drive systems for motor drives:
  - Mechanical engineering
  - Elevators / escalators
  - Pipes
  - Conveyor technology
  - Ventilation and air conditioning
  - Robotics
  - Automation technology
- Power supplies
- Wind turbines

## Technical Data

- Nominal Voltage : 500 V
- Rated current : 4 - 1200 A
- Inductance : 0,005 - 1,5 mH

## Circuit example

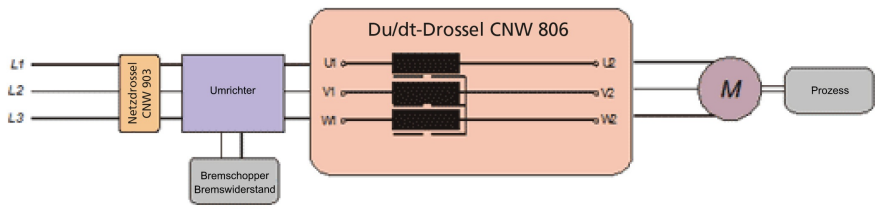


Last modified: 27.03.2018. All data is provided to the best of our knowledge and awareness and is subject to error and amendment.

Contatti REO Italia:
+39 030 279 3883 •
info@reoitalia.it

# CNW 806

*Three-phase-dv/dt filter*

## Technical data

| Type | Rated voltage [V] | Ragted current [A] | Inductance [mH] | Resistance [mΩ] | Power loss [W] | Uk @ 400 V [%] | Uk @ 230 V [%] | Uk @ 480 V [%] | Uk @ 500 V [%] |
|---|---|---|---|---|---|---|---|---|---|
| CNW 806/4 | | 4 | 1,5 | 37,0 | 7 | | 1,4 | 0,7 | 0,7 |
| CNW 806/10 | | 10 | 0,6 | 13,8 | 13 | | 1,4 | 0,7 | 0,7 |
| CNW 806/18 | | 18 | 0,33 | 5,8 | 17 | | 1,4 | 0,7 | 0,7 |
| CNW 806/24 | | 24 | 0,245 | 4,7 | 22 | | 1,4 | 0,7 | 0,6 |
| CNW 806/37 | | 37 | 0,16 | 2,7 | 29 | | 1,4 | 0,7 | 0,6 |
| CNW 806/48 | | 48 | 0,123 | 1,8 | 33 | | 1,4 | 0,7 | 0,6 |
| CNW 806/65 | | 65 | 0,09 | 0,65 | 37 | | 1,4 | 0,7 | 0,6 |
| CNW 806/90 | | 90 | 0,065 | 0,4 | 46 | | 1,4 | 0,7 | 0,6 |
| CNW 806/120 | | 120 | 0,05 | 0,45 | 60 | | 1,4 | 0,7 | 0,7 |
| CNW 806/150 | | 150 | 0,039 | 0,35 | 80 | | 1,4 | 0,7 | 0,6 |
| CNW 806/180 | | 180 | 0,033 | 0,35 | 100 | | 1,4 | 0,7 | 0,7 |
| CNW 806/200 | 400 - 500 V | 200 | 0,029 | 0,29 | 100 | 0,8 | 1,4 | 0,7 | 0,6 |
| CNW 806/250 | | 250 | 0,024 | 0,22 | 130 | | 1,4 | 0,7 | 0,7 |
| CNW 806/300 | | 300 | 0,02 | 0,15 | 130 | | 1,4 | 0,7 | 0,7 |
| CNW 806/350 | | 350 | 0,017 | 0,12 | 130 | | 1,4 | 0,7 | 0,7 |
| CNW 806/400 | | 400 | 0,015 | 0,1 | 150 | | 1,4 | 0,7 | 0,7 |
| CNW 806/500 | | 500 | 0,012 | 0,1 | 200 | | 1,4 | 0,7 | 0,7 |
| CNW 806/600 | | 600 | 0,010 | 0,08 | 250 | | 1,4 | 0,7 | 0,7 |
| CNW 806/700 | | 700 | 0,008 | 0,07 | 260 | | 1,3 | 0,6 | 0,6 |
| CNW 806/800 | | 800 | 0,007 | 0,06 | 280 | | 1,3 | 0,6 | 0,6 |
| CNW 806/900 | | 900 | 0,0065 | 0,05 | 300 | | 1,4 | 0,7 | 0,6 |
| CNW 806/1000 | | 1000 | 0,006 | 0,05 | 360 | | 1,4 | 0,7 | 0,7 |
| CNW 806/1200 | | 1200 | 0,005 | 0,05 | 480 | | 1,4 | 0,7 | 0,7 |

## Dimension drawings

Image 1

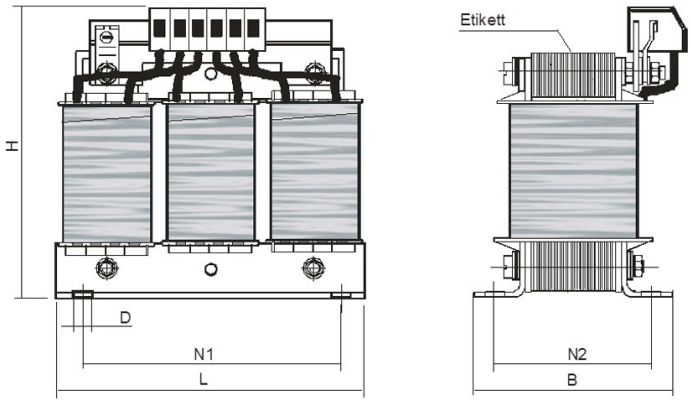


Image 2

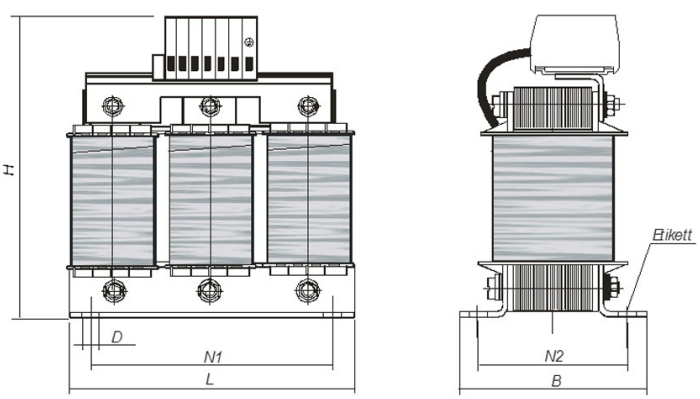


Last modified: 27.03.2018. All data is provided to the best of our knowledge and awareness and is subject to error and amendment.

Contatti REO Italia:
+39 030 279 3883 •
info@reoitalia.it

# CNW 806

*Three-phase-dv/dt filter*

## Dimension drawings

Image 3

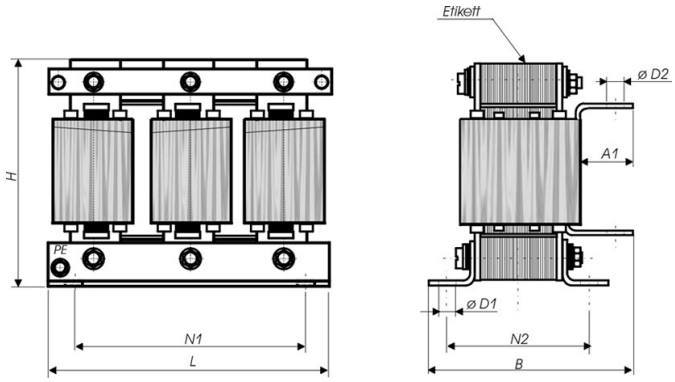


## Dimensions

| Type | L [mm] | B [mm] | H [mm] | N1 [mm] | N2 [mm] | D [mm] | Aluminium [kg] | Copper [kg] | Weight [kg] | Connecton | Image |
|---|---|---|---|---|---|---|---|---|---|---|---|
| CNW 806/4 | 95 | 47 | 106 | 56 | 34 | 4.8 x 9.0 | 0 | 0,4 | 1,1 | 2.5 mm² | 1 |
| CNW 806/10 | 95 | 56 | 106 | 56 | 43 | 4.8 x 9.0 | 0 | 0,5 | 1,5 | 2.5 mm² | 1 |
| CNW 806/18 | 125 | 60 | 160 | 100 | 45 | 5 x 8 | 0 | 0,9 | 2,2 | 2.5 mm² | 2 |
| CNW 806/24 | 125 | 60 | 160 | 100 | 45 | 5 x 8 | 0 | 1,0 | 2,3 | 4 mm² | 2 |
| CNW 806/37 | 125 | 70 | 160 | 100 | 55 | 5 x 8 | 0 | 1,1 | 2,8 | 6 mm² | 2 |
| CNW 806/48 | 155 | 77 | 187 | 130 | 57 | 8 x 12 | 0 | 1,6 | 4 | 10 mm² | 2 |
| CNW 806/65 | 155 | 91 | 187 | 130 | 71 | 8 x 12 | 0 | 2,1 | 6 | 10 mm² | 2 |
| CNW 806/90 | 190 | 110 | 157 | 170 | 67 | 8 x 12 | 0 | 3,0 | 9 | 25 x 3 | 3 |
| CNW 806/120 | 230 | 108 | 200 | 176 | 71 | 9 x 13 | 0,9 | 0,7 | 10 | 25 x 3 | 3 |
| CNW 806/150 | 240 | 115 | 209 | 185 | 74 | 10 x 18 | 0,8 | 0,9 | 11 | 30 x 3 | 3 |
| CNW 806/180 | 240 | 125 | 210 | 185 | 84 | 10 x 18 | 0,7 | 0,8 | 13 | 30 x 3 | 3 |
| CNW 806/200 | 240 | 128 | 210 | 185 | 84 | 10 x 18 | 0,9 | 1,0 | 14 | 30 x 4 | 3 |
| CNW 806/250 | 300 | 121 | 262 | 224 | 78 | 10 x 18 | 1,1 | 1,3 | 16 | 30 x 4 | 3 |
| CNW 806/300 | 300 | 124 | 262 | 224 | 78 | 10 x 18 | 1,7 | 1,3 | 16 | 30 x 4 | 3 |
| CNW 806/350 | 300 | 136 | 263 | 224 | 78 | 10 x 18 | 2,4 | 2,2 | 18 | 40 x 5 | 3 |
| CNW 806/400 | 300 | 151 | 263 | 224 | 95 | 10 x 18 | 2,2 | 2,2 | 24 | 40 x 5 | 3 |
| CNW 806/500 | 300 | 159 | 294 | 224 | 95 | 10 x 18 | 3,3 | 2,6 | 27 | 40 x 5 | 3 |
| CNW 806/600 | 300 | 177 | 293 | 224 | 105 | 10 x 18 | 2,5 | 4,4 | 32 | 40 x 8 | 3 |
| CNW 806/700 | 300 | 177 | 325 | 224 | 105 | 10 x 18 | 3 | 4,9 | 35 | 40 x 8 | 3 |
| CNW 806/800 | 300 | 194 | 325 | 224 | 105 | 10 x 18 | 3,8 | 5,2 | 36 | 40 x 8 | 3 |
| CNW 806/900 | 420 | 207 | 387 | 316 | 124 | 13 x 20 | 5,5 | 10,7 | 55 | 60 x 10 | 3 |
| CNW 806/1000 | 420 | 217 | 388 | 316 | 124 | 13 x 20 | 5,9 | 10,8 | 56 | 60 x 10 | 3 |
| CNW 806/1200 | 420 | 217 | 389 | 316 | 124 | 13 x 20 | 6 | 10,8 | 56 | 60 x 10 | 3 |

Last modified: 27.03.2018. All data is provided to the best of our knowledge and awareness and is subject to error and amendment.