Your contact:
+49-(0)2 12-88 04-0 • info@reo.de

REOLAB 370

REO three-phase laboratory power supply for continuously variable voltage with electronic control



Unique Selling Point

- Low voltage drop and low short-circuit impedance
- Clean sine wave of the AC output
- Precise output adjustment through built-in digital indicators
- Fast regulation of voltage or load variations
- Remote setpoint adjustment possible via external computer
- True rms measurements with the digital meters
- Overload protection with automatic circuit breaker
- Low space requirement

Description

Applications:

The AC laboratory power supply is required in every test bay, laboratory or quality assurance department for test and development purposes. The device under test can be operated with a variable supply, thus permitting overvoltage and undervoltage tests to be conducted, as well as endurance tests.

The output voltage is kept constant to within ±1 % by the REO duty-cycle controller TVR 6500.

Technical Data

- Input voltage : 3x400 V
- Output voltage : 3x0 - 520 V
- Output Current : 3x10 A

Options

- Analog voltage and current meters
- External connection for emergency Off circuit
- External connection of warning lamps
- Bus interface for remote operation

Last modified: 27.03.2018. All data is provided to the best of our knowledge and awareness and is subject to error and amendment.

Your contact:
+49-(0)2 12-88 04-0 • info@reo.de

REOLAB 370

REO three-phase laboratory power supply for continuously variable voltage with electronic control

Type	Rated voltage [V]	Rated power	Output voltage	Output current [A] AC	Connection
REOLAB 370/9 AC output	3 x 400 50 / 60 Hz	max. 9	3 x 0 – 520	3 x 10	Star / Star

Surface finish: RAL 7035/5018
Admitted max. ambient temp.: 40 °C
Natural cooling
Regulation time: about 15 sec for the full control range

Features

- Master switch with low-voltage trip
- Mains filter
- Inrush current limiting
- Power contactor in the output
- Digital voltage and current meters
- Duty cycle regulation of output voltage
- Emergency switch
- Setpoint potentiometer
- Internal/External setpoint selector
- BNC socket for external setpoint
- Illuminated pushbutton for secondary output
- Auto/Manual selector
- Min/max voltage pushbutton for manual operation
- Safety laboratory sockets

Last modified: 27.03.2018. All data is provided to the best of our knowledge and awareness and is subject to error and amendment.

Your contact:
+49-(0)2 12-88 04-0 • info@reo.de

REOLAB 370

REO three-phase laboratory power supply for continuously variable voltage with electronic control

Block diagrams

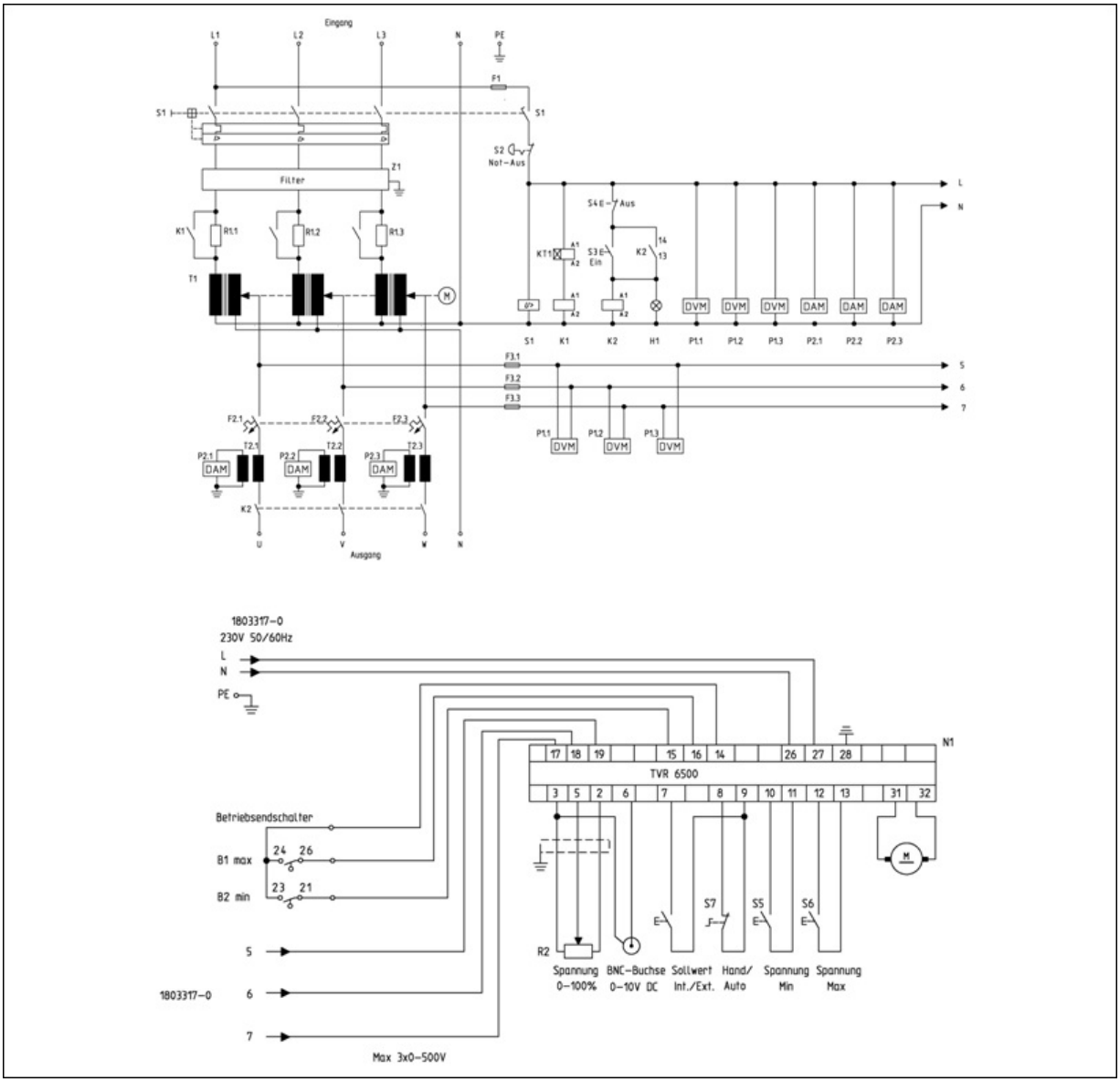

Last modified: 27.03.2018. All data is provided to the best of our knowledge and awareness and is subject to error and amendment.

Your contact:
+49-(0)2 12-88 04-0 • info@reo.de

REOLAB 370

REO three-phase laboratory power supply for continuously variable voltage with electronic control

Dimension drawing

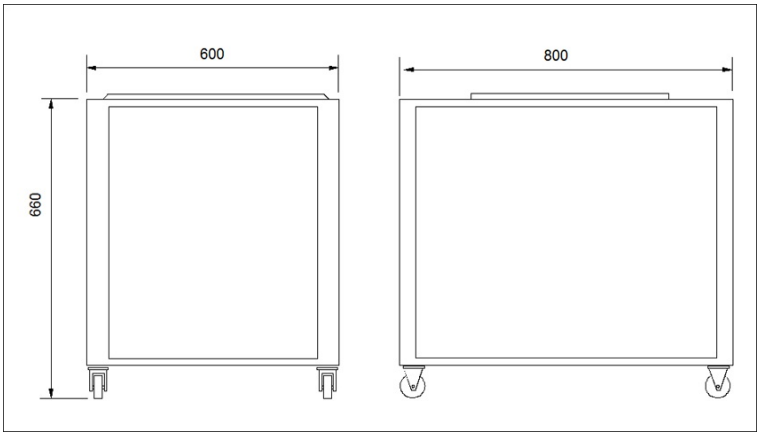

Last modified: 27.03.2018. All data is provided to the best of our knowledge and awareness and is subject to error and amendment.