Contatti REO Italia:
+39 030 279 3883 •
info@reoitalia.it

CNW M 833

Fully encapsulated three-phase dv/dt Filter (IP54)



Unique Selling Point

- Usable in rough environment
- Protection ratings: IP00 - IP66
- Optimal mechanical protection of the choke
- Protection for electrical consumers
- Limit the voltage rise to < 500V/µs
- Extended service life of electrical consumers
- Low leakage currents on the motor
- Reduced losses
- Very low noise
- Easy construction
- Production possible according to UL insulation
- system E251513

Description

Reduce voltage rice to < 500V/µs - electrical consumrs and insulation will protected with low costs.

The dv / dt filters in fully encapsulated version are specially designed for rough environments and offer a very good mechanical protection of the component. The fully encapsulation allows design up to protection ratings IP 66.

The filter attenuates the voltage rise to acceptable values and prevents overvoltages on long supply lines. Losses and heating are minimized and reduces the leakage current. By limiting the rate of voltage rise, the motor insulation is protected and thus increases the service life.

Also, the electromagnetic interference can be reduced in the radiation range of 1 MHz to 30 MHz.

Voltage risers is reduced to < 500V/µs.

- Rated voltage: U ≤ 3 x 400 V
- Reduce the voltage rise dv / dt to < 500V/µs
- Max. cable length to the motor: 200 m
- Field frequency: 10 - 60 Hz
- Short circuit voltage at 400 V: 0.8%
- Drive switching frequency: 4 kHz > ft < 8 kHz
- According to: EN 60289 / EN 61558
- Test voltage: L-L 2500 V, AC/50Hz 60s; L-PE 2500 V, AC/50Hz 60s
- Insulation class: T40/F
- Protection rating: IP20
- Climatic categorie: DIN IEC 60068-1
- Overload: 1,5 x INenn 1 min / h
- Ambient temperature: 40 °C
- Design: standing on foot angle

Typical applications

- Drive systems for motor drives:
  - Mechanical engineering
  - Elevators / escalators
  - Pipes
  - Conveyor technology
  - Ventilation and air conditioning
  - Robotics
  - Automation technology
- Power supplies
- Wind turbines

Technical Data

- Nominal Voltage : 400 V
- Rated current : 8 - 175 A
- Inductance : 0,09 - 2 mH

Circuit example

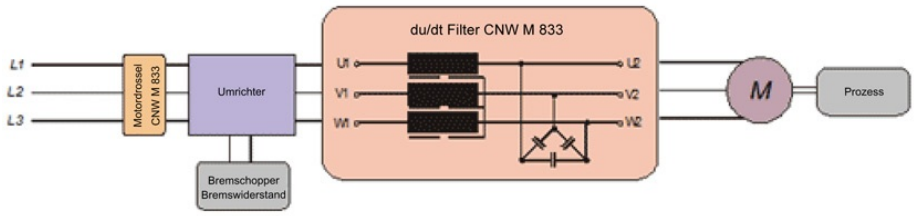

Last modified: 27.03.2018. All data is provided to the best of our knowledge and awareness and is subject to error and amendment.

Contatti REO Italia:
+39 030 279 3883 •
info@reoitalia.it

CNW M 833

Fully encapsulated three-phase dv/dt Filter (IP54)

Technical data

Type	Rated voltage [V]	Rated current [A]	Inductance [mH]	Capacity [pF]	Weight [kg]	Clip [mm²]	Cable connection
CNW M 833 / 8	3 x 400 V ≤ 60 Hz	8	2	330	3	2,5	M20x1,5
CNW M 833 / 16		16	0,9	330	4	6	M25x1,5
CNW M 833 / 36		36	0,42	330	8	16	M32x1,5
CNW M 833 / 60		60	0,27	2200	24	35	M40x1,5
CNW M 833 / 90		90	0,17	4700	27	35	M40x1,5
CNW M 833 / 175		175	0,09	10000	37	95	M63x1,5

Last modified: 27.03.2018. All data is provided to the best of our knowledge and awareness and is subject to error and amendment.

Contatti REO Italia:
+39 030 279 3883 •
info@reoitalia.it

CNW M 833

Fully encapsulated three-phase dv/dt Filter (IP54)

Dimension drawings

Design 1

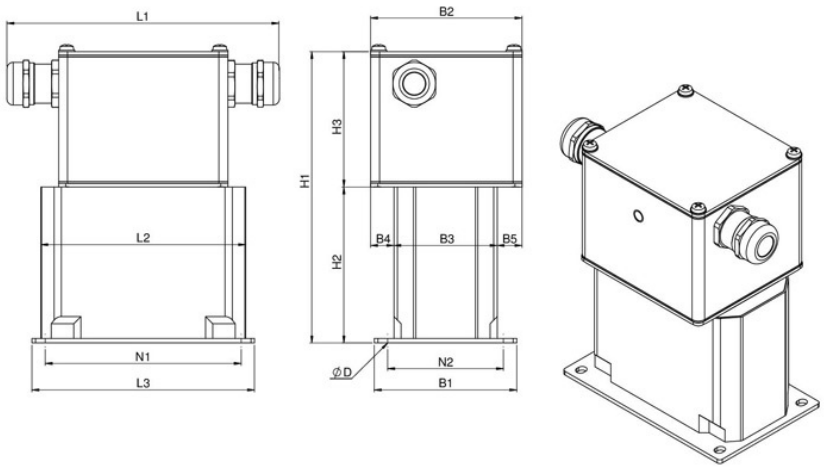

Design 2

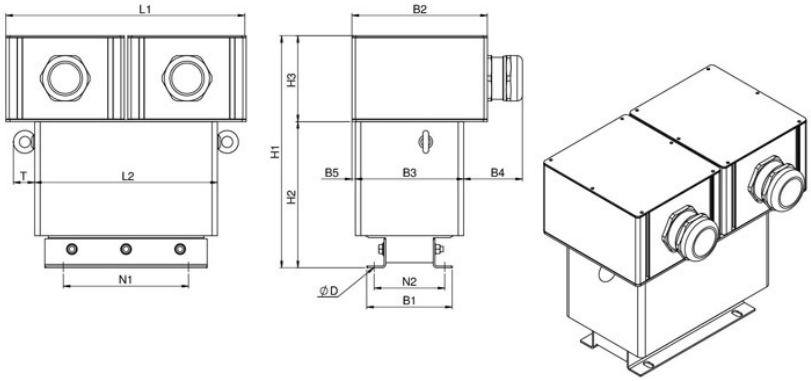

Dimensions

Type	L1 [mm]	L2 [mm]	L3 [mm]	B1 [mm]	B2 [mm]	B3 [mm]	B4 [mm]	B5 [mm]	H1 [mm]	H2 [mm]	H3 [mm]	N1 [mm]	N2 [mm]	D [mm]	Design
CNW M 833 / 8	170	140	150	80	85	55	13	15	188	113	75	135	65	5,5x7	3
CNW M 833 / 16	180	140	170	85	85	65	10	11	188	113	75	155	70	5,5x7	3
CNW M 833 / 36	245	175	175	115	120	80	20	20	250	140	110	155	95	5,5x15	3
CNW M 833 / 60	315	249	255	180	175	120	30	27	323	218	105	185	150	9x13	3
CNW M 833 / 90	315	250	255	180	175	120	30	25	325	218	105	185	150	9x13	3
CNW M 833 / 180	355	270	-	127	200	160	105	8	350	220	130	185	105	10x18	4

Last modified: 27.03.2018. All data is provided to the best of our knowledge and awareness and is subject to error and amendment.