Contatti REO Italia:
+39 030 279 3883 •
info@reoitalia.it

NTT LD-DH 100

Directly cooled surge current choke

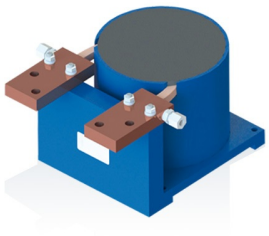

Unique Selling Point

- Less copper
- Small dimensions compared to traditional cooling methods
- Lower weight
- Cooling with water/glycol
- High protection class
- Suitable for high pulse current

Description

The current limiting inductor limits the short-circuit current in a bridge circuit. Thus, the intermediate circuit is protected and prevents the destruction of the connected semiconductor devices. Usually IGBT's.

- According to: EN 60076-6
- Test voltage: 12kV
- Overload: 1,5 x INenn 1 min / h
- Climatic categorie: DIN IEC 68 Teil 1 25/085/21

Typical applications

- Drive technology
- Wind energy
- Train technology

Technical Data

- Nominal Voltage : 3000 V
- Rated current : 500 - 2500 A

Circuit example



Last modified: 27.03.2018. All data is provided to the best of our knowledge and awareness and is subject to error and amendment.

Contatti REO Italia:
+39 030 279 3883 •
info@reoitalia.it

NTT LD-DH 100

Directly cooled surge current choke

Technical data

Type	Rated voltage [V]	Rated current [A]	Inductance [µH]	DC resistance [mΩ]
NTT LD DH 100/500	3000	500	9,0	0,84
NTT LD DH 100/1000	3000	1000	4,5	0,48
NTT LD DH 100/2000	3000	2000	2,25	0,19
NTT LD DH 100/1500	3000	1500	4,5	0,31
NTT LD DH 100/2250	3000	2250	5,0	0,30
NTT LD DH 100/2500	3000	2500	1,8	0,11

Dimension drawings

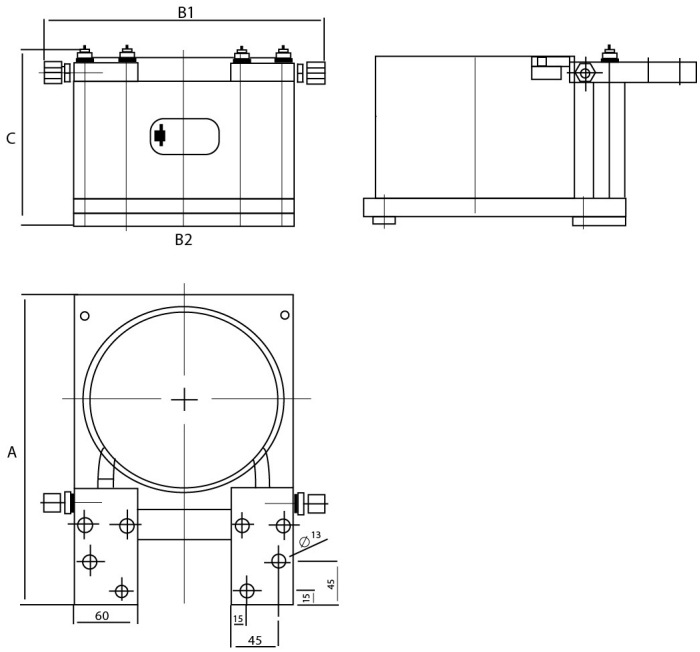

Dimensions

Type	A [mm]	B1 [mm]	B2 [mm]	C [mm]	Weight [kg]
NTT LD DH 100-500	260	230	170	200	9
NTT LD DH 100-1000	260	230	170	175	7
NTT LD DH 100-2000	260	230	170	175	7
NTT LD DH 100-1500	318	268	210	178	15
NTT LD DH 100-2250	318	268	210	250	23
NTT LD DH 100-2500	318	268	210	178	15

Last modified: 27.03.2018. All data is provided to the best of our knowledge and awareness and is subject to error and amendment.