Your contact:
+49-(0)2 12-88 04-0 • info@reo.de

REOLINE Plus AC-S/A

REOLINE Laboratory Power Supplies (analog, auto-windings)



Unique Selling Point

- Adjustable, low-loss output voltage
- According to IEC/EN 61558-2-13 IEC/EN 61010-1
- Mains cable 2m long
- Illuminated power switch with integrated thermal short-circuit protection
- Toroidal transformer with absolute zero position
- Earthed socket at the output
- Short time overload possible
- Clean sine wave of the AC output voltage
- Easy connectivity
- Does not generate electromagnetic interference
- Modifications on request
- Inrush-current limitation optional

Description

This portable power supply is a single-phase alternating current supply unit with analog display, auto-windings and continuously adjustable output voltage of 0 ... 250 VAC. The absolute zero position causes the zero voltage state.

Applications:

- Laboratory
- Test field
- Factory and service applications

Technical Data

- Nominal Voltage : 230 V
- Output Current : 0,60 - 8 A
- Output voltage : 0 - 250 V
- Output power : 0,15 - 2 kVA

Circuit example

Last modified: 27.03.2018. All data is provided to the best of our knowledge and awareness and is subject to error and amendment.

Your contact:
+49-(0)2 12-88 04-0 • info@reo.de

REOLINE Plus AC-S/A

REOLINE Laboratory Power Supplies (analog, auto-windings)

Technical data

Typ REOLINE Plus AC-S/A/...	Input voltage [V]	Output voltage [V]	Output current[A]	Output power [kVA]	Copper [kg]
M3	230 V 50/60 Hz	0....250 VAC	0,60	0,15	0,07
M4			0,85	0,20	0,09
M5			1,20	0,30	0,14
M6			2,00	0,50	0,16
M61			2,80	0,70	0,23
M7			3,00	0,75	0,45
M8			4,50	1,10	0,70
M9			6,00	1,50	0,90
M10			8,00	2,00	1,00

Last modified: 27.03.2018. All data is provided to the best of our knowledge and awareness and is subject to error and amendment.

Your contact:
+49-(0)2 12-88 04-0 • info@reo.de

REOLINE Plus AC-S/A

REOLINE Laboratory Power Supplies (analog, auto-windings)

Dimension drawing

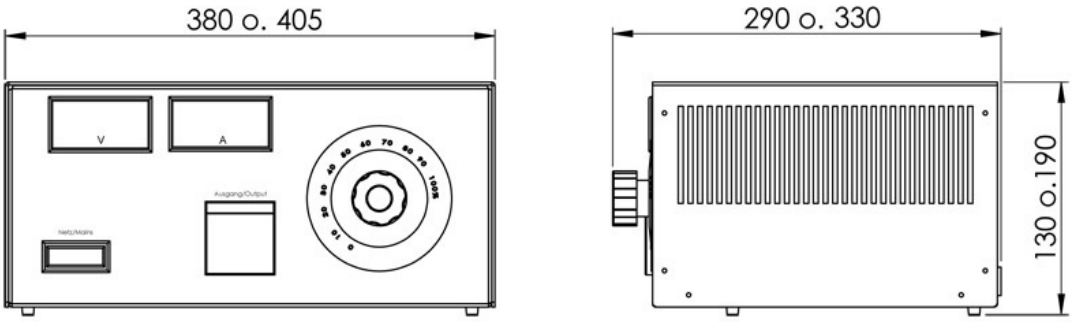

Typ REOLINE Plus AC-S/A/...	Width [mm]	Height [mm]	Depth [mm]	Weight [kg]
M3	380	130	290	5,0
M4	380	130	290	5,6
M5	380	130	290	6,1
M6	380	130	290	6,8
M61	380	130	290	7,5
M7	405	190	330	11,1
M8	405	190	330	12,4
M9	405	190	330	14,2
M10	405	190	330	16,0
CONNECTION+ASSEMBLY				
Input	Power cord with safety plug			
Output	Earthed socket			

Last modified: 27.03.2018. All data is provided to the best of our knowledge and awareness and is subject to error and amendment.