Your contact:
+49-(0)2 12-88 04-0 • info@reo.de

REOLINE Plus AC-SG/D

REOLINE Laboratory Power Supplies (digital, separate windings)



Unique Selling Point

- Adjustable, low-loss output voltage
- According to IEC/EN 61558-2-4 IEC/EN 61010-1
- Mains cable 2m long
- Illuminated power switch with integrated thermal short-circuit protection
- Toroidal transformer with absolute zero position
- Earthed socket at the output
- Short time overload possible
- Clean sine wave of the AC output voltage
- Easy connectivity
- Does not generate electromagnetic interference
- Modifications on request
- Inrush-current limitation optional

Description

This portable power supply is a single-phase alternating current supply unit with digital display, separate windings and continuously adjustable output voltage of 0 ... 250 VAC. The absolute zero position causes the zero voltage state.

Applications:

- Laboratory
- Test field
- Factory and service applications

Technical Data

- Nominal Voltage : 230 V
- Output Current : 0,60 - 8 A
- Output voltage : 0 - 250 V
- Output power : 0,15 - 2 kVA

Circuit example

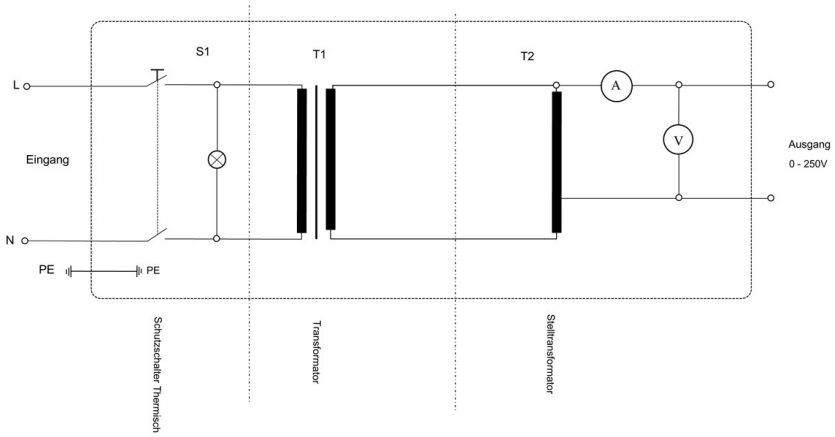

Last modified: 27.03.2018. All data is provided to the best of our knowledge and awareness and is subject to error and amendment.

Your contact:
+49-(0)2 12-88 04-0 • info@reo.de

REOLINE Plus AC-SG/D

REOLINE Laboratory Power Supplies (digital, separate windings)

Technical data

Typ REOLINE Plus AC-SG/D/...	Voltage [V]	Output voltage [V]	Output current [A]	Output power [kVA]	Copper [kg]
M3	230 V 50/60 Hz	0....250 VAC	0,60	0,15	1,25
M4			0,85	0,20	1,55
M5			1,20	0,30	1,80
M6			2,00	0,50	2,20
M61			2,80	0,70	2,65
M7			3,00	0,75	4,25
M8			4,50	1,10	4,50
M9			6,00	1,50	5,90
M10			8,00	2,00	6,90

Last modified: 27.03.2018. All data is provided to the best of our knowledge and awareness and is subject to error and amendment.

Your contact:
+49-(0)2 12-88 04-0 • info@reo.de

REOLINE Plus AC-SG/D

REOLINE Laboratory Power Supplies (digital, separate windings)

Dimension drawing

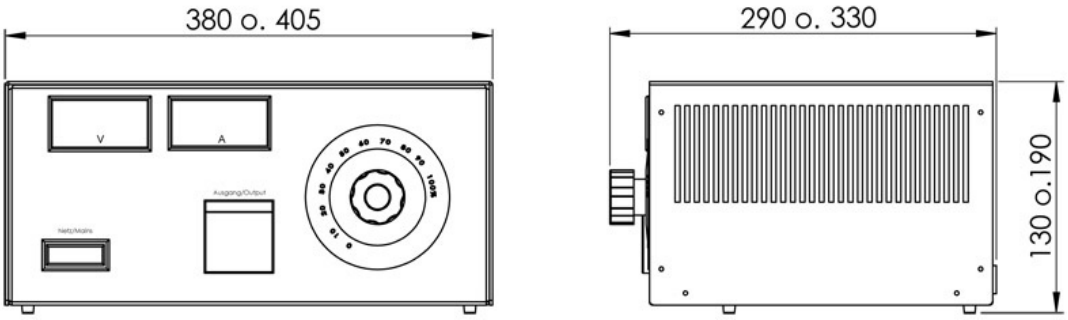

Typ REOLINE Plus AC-SG/D/...	Width [mm]	Height [mm]	Depth [mm]	Weight [kg]
M3	380	130	290	8,5
M4	380	130	290	9,0
M5	380	130	290	11,0
M6	380	130	290	12,5
M61	380	130	290	14,0
M7	405	190	330	19,0
M8	405	190	330	22,0
M9	405	190	330	27,0
M10	405	190	330	31,0
CONNECTION+ASSEMBLY				
Input	Power cord with safety plug			
Output	Socket			

Last modified: 27.03.2018. All data is provided to the best of our knowledge and awareness and is subject to error and amendment.