Your contact:
+49-(0)2 12-88 04-0 • info@reo.de

REOLINE Plus DC-SG/A

REOLINE Laboratory Power Supplies (analog, separate windings)



Unique Selling Point

- Adjustable, low-loss output voltage
- According to IEC/EN 61558-2-4 IEC/EN 61010-1
- Mains cable 2m long
- Illuminated power switch with integrated thermal short-circuit protection
- Toroidal transformer with absolute zero position
- Safety socket 4mm at the output
- Short time overload possible
- Easy connectivity
- Does not generate electromagnetic interference
- Modifications on request
- Residual ripple 48%
- Inrush-current limitation optional

Description

This portable lab - power supply is a single-phase DC table device with analogue display, separate windings and continuously adjustable output voltage of 0 ... 200 VDC. The absolute zero position causes the zero voltage state.

Applications:

- Laboratory
- Test field
- Factory and service applications

Technical Data

- Nominal Voltage : 230 V
- Output Current : 0,60 - 8 A
- Output voltage : 0 - 200 V
- Output power : 120 - 1600 W

Circuit example

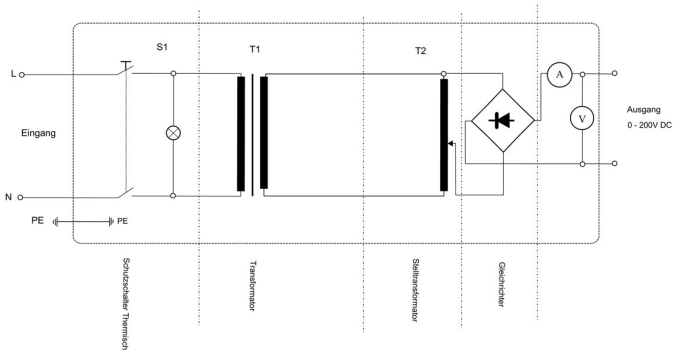

Last modified: 27.03.2018. All data is provided to the best of our knowledge and awareness and is subject to error and amendment.

Your contact:
+49-(0)2 12-88 04-0 • info@reo.de

REOLINE Plus DC-SG/A

REOLINE Laboratory Power Supplies (analog, separate windings)

Technical data

Typ REOLINE Plus DC-SG/A/...	Voltage [V]	Output voltage [V]	Output current[A]	Output power [W]	Copper [kg]
M3	230 V 50/60 Hz	0....200 VDC	0,60	120	1,25
M4			0,85	170	1,55
M5			1,20	240	1,80
M6			2,00	400	2,20
M61			2,80	560	2,65
M7			3,00	600	4,25
M8			4,50	900	4,50
M9			6,00	1200	5,90
M10			8,00	1600	6,90

Last modified: 27.03.2018. All data is provided to the best of our knowledge and awareness and is subject to error and amendment.

Your contact:
+49-(0)2 12-88 04-0 • info@reo.de

REOLINE Plus DC-SG/A

REOLINE Laboratory Power Supplies (analog, separate windings)

Dimension drawing

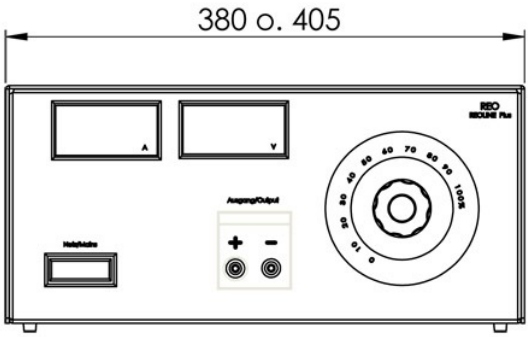

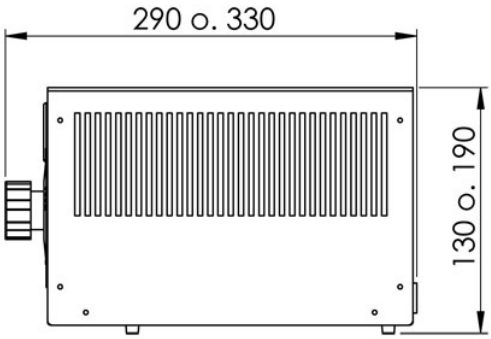

Typ REOLINE Plus DC-SG/A/...	Width [mm]	Height [mm]	Depth [mm]	Weight [kg]
M3	380	130	290	8,8
M4	380	130	290	9,3
M5	380	130	290	11,4
M6	380	130	290	13,0
M61	380	130	290	14,4
M7	405	190	330	19,9
M8	405	190	330	23,0
M9	405	190	330	28,5
M10	405	190	330	33,0
CONNECTION+ASSEMBLY				
Input	Power cord with safety plug			
Output	Safety socket 4mm			

Last modified: 27.03.2018. All data is provided to the best of our knowledge and awareness and is subject to error and amendment.