Contatti REO Italia:
+39 030 279 3883 •
info@reoitalia.it

CNW 957

Regenerative harmonics filter (400V/50 Hz)

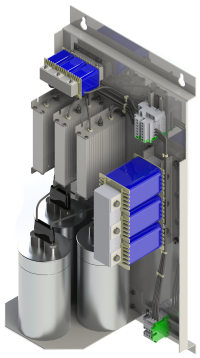

Unique Selling Point

- Increases the efficiency of the drive by improving power quality
- Low losses save high energy costs
- Compact design and low weight
- Natural cooling
- Optional charging resistor

Description

LCL filters are used especially in regenerative converters (AFE), but also for inverters for renewable energies. The main purpose of this filter is to eliminate the PWM frequencies for protect the supply network.

- Rated voltage: 3 x 400V / 50Hz
- Climatic categorie: 25/085/21 DIN IEC 68 Part 1
- Ambient temperature: 40°C
- Protection rating: IP00
- Optional: available with charging resistor

Technical Data

- Nominal Voltage : 400 V
- Rated current : 14 - 74 A

Circuit example

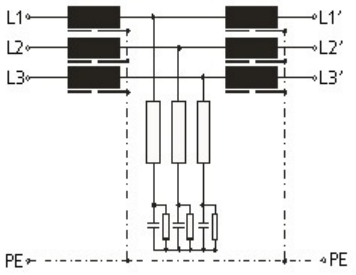

Last modified: 26.04.2018. All data is provided to the best of our knowledge and awareness and is subject to error and amendment.

Contatti REO Italia:
+39 030 279 3883 •
info@reoitalia.it

CNW 957

Regenerative harmonics filter (400V/50 Hz)

Technical and mechanical data

Type	Rated current [A]	L [mm]	B [mm]	H [mm]	N1 [mm]	N2 [mm]	D1 [mm]	D2 [mm]	Terminals [mm²]	Image
CNW 957 / 14	14	610	320	155	590	250	Ø9 / Ø17	Ø7	4	1
CNW 957 / 29	29	610	320	225	590	250	Ø9 / Ø17	Ø7	10	1
CNW 957 / 42	42	880	600	235	853	500	Ø9 / Ø17	Ø9	16	2
CNW 957 / 74	74	880	600	235	853	500	Ø9 / Ø17	Ø9	35	2

Dimension drawings

Image 1

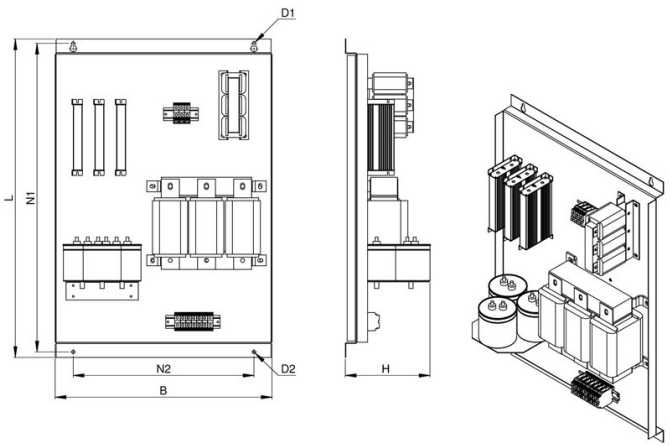

Image 2

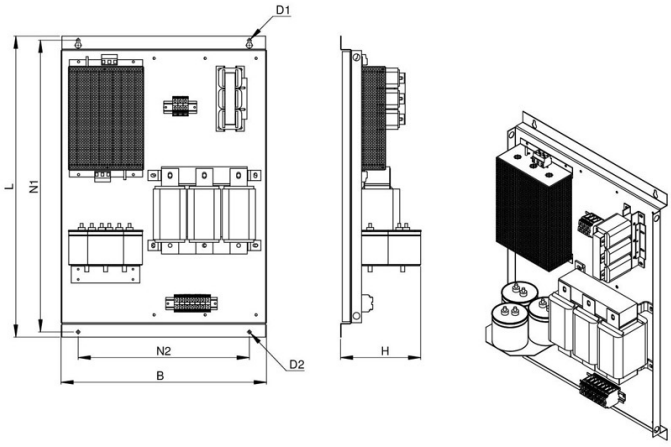

Last modified: 26.04.2018. All data is provided to the best of our knowledge and awareness and is subject to error and amendment.