Your contact:
+49-(0)2 12-88 04-0 • info@reo.de

Series WDI

AC/DC Open loop current transformers



Unique Selling Point

- Measurement of direct and alternating currents
- Voltage output
- Low power consumption
- No additional losses in the measuring circuit
- High-quality UL listed insulating materials (e.g. UL94-V0)
- Safe electrically isolated primary and secondary circuits
- Good price/performance ratio
- Low weight
- Robust housing designs (for horizontal/vertical mounting)
- Connections: clamps, plugs, flat-cable plugs or cables
- Wide range of housings with various push- through openings

Description

The WDI current sensor is an open loop current transformer designed for measuring direct and alternating currents.

The primary current generates a magnetic flux and this is evaluated by means of a magnetic circuit and Hall sensor in the air gap. The signal from the Hall sensor is processed by an electronic circuit and an exact representation of the primary current is output as a voltage.

- According to: EN50178
- Tracking resistance: 550/600M
- Frequency range: (-3 dB) DC...10

Applications

- Industry
- Renewable energy
- Railway engineering
- Energy, automation and building technology

Technical Data

- Primary rated current : 25 - 500 A
- Frequency range : 10000 Hz

Mode of Operation

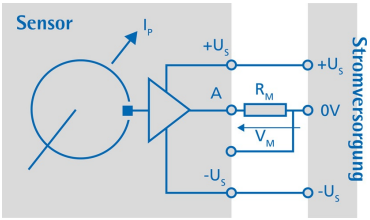

Last modified: 27.03.2018. All data is provided to the best of our knowledge and awareness and is subject to error and amendment.

Your contact:
+49-(0)2 12-88 04-0 • info@reo.de

Series WDI

AC/DC Open loop current transformers

Technical data

Type WDI		25	150	300	500	
îPN	Peak	25	150	300	500	[A]
îmaxPN	Peak	0 - ±30	0 - ±180	0 - ±360	0 - ±600	[A]
îoutPN		±5				[mA]
RBmin	± 15 Vdc	± 30A peak=2	± 150A peak=2	± 300A peak=2	± 500A peak=2	[kΩ]
			± 180A peak=2	± 360A peak=2	± 600A peak=2	[kΩ]
RBmax	± 15 Vdc	± 30A peak=10	± 150A peak=10	± 300A peak=10	± 500A peak=10	[kΩ]
			± 180A peak=10	± 360A peak=10	± 600A peak=10	[kΩ]
ÛaN	Peak	±10				[V]
US	± 5%	±15				[Vdc]
IBO	(@± 15V) + IoutpN	9				[mA]
VP	r.m.s 50 Hz	3				[kV]
VW	1,2/50 µs	3	5			[kV]
Accuracy and dynamic data						
FU	@IPN, TA=25°C	±0,6				[%]
FLU	@TA=25°C	≤1,0				[%]
Uo	@ IPN = 0, TA =25°C	20				[mV]
ΔUo	Io -25°C...+70°C	60				[mV]
%/ΔT		≤0,05				[%K]
tr	@ 90% von IPN	<25				[µs]
f		(-3 dB) DC...10				[kHz]
General data						
TA		-25 bis +75	-0 bis +75			[°C]
Ts		-10 bis +85				[°C]
m		0,075			0,120	[kg]
dCp		4	10			[mm]
dCi		3	9			[mm]

Symbols

îPN = Primary rated current
îmaxPN = Max. Primary rated current
îoutPN = Max. admissible output current
RBmin = Load resistance minimal
RBmax = Load resistance maximal
ÛaN = RMS Rated output voltage
US = Operation voltage
IBO = No-load current
VP = Insulation test voltage
VW = Voltage drop
FU = Accuracy [50 Hz]
FLU = Linearity error
Uo = Offset voltage
ΔUo = Offset voltage drift
%/ΔT = Temperature drift
tr = Response time
f = Frequency range
TA = Ambient temperature
Ts = Storage temperature
m = Weight
dCp = Creepage distance
dCi = Clearance distance

Last modified: 27.03.2018. All data is provided to the best of our knowledge and awareness and is subject to error and amendment.

Your contact:
+49-(0)2 12-88 04-0 • info@reo.de

Series WDI

AC/DC Open loop current transformers

Dimension drawings

Design 25 A - FS 6,3 x 0,8

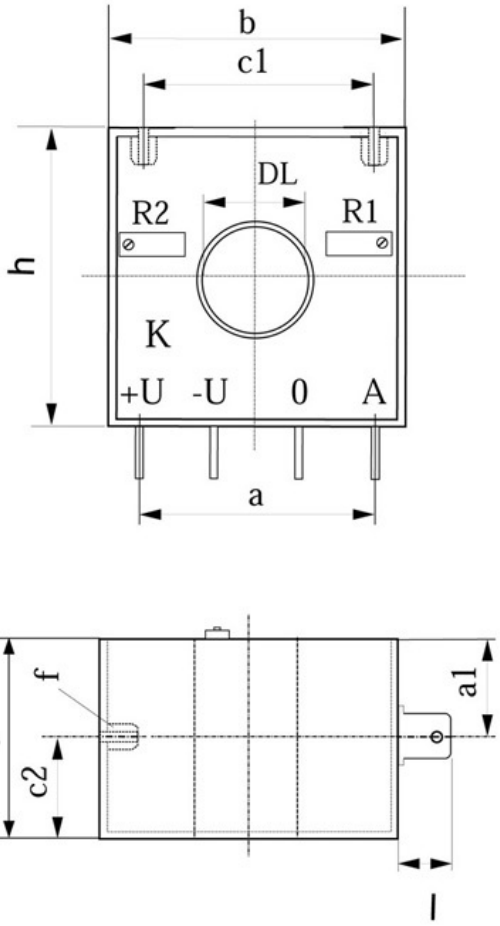

Design over 25 A - MKS 1854

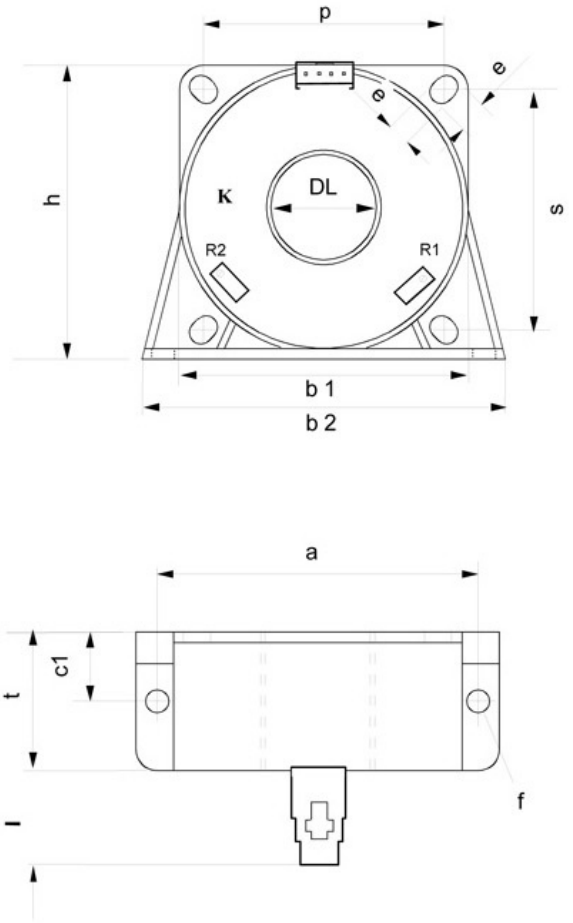

Dimensions

Type	PIN-Connection/ 4polig	h [mm]	b [mm]	b1/b2 [mm]	t [mm]	DL [mm]	p/s [mm]	a / a1 [mm]	c1/c2 [mm]	f [mm]	e [mm]	l [mm]
WDI 25	A O –U +U	39	39	-	26,5	10	-	3 x 10/6,5	25/6,5	M4	-	9
WDI 150	A O –U +U	55	-	55/68	26	20,2	45/45	60/--	13,0/--	4,3	6,0x4,0	23
WDI 300	A O –U +U	55	-	55/68	26	20,2	45/45	60/--	13,0/--	4,3	6,0x4,0	23
WDI 500	A O –U +U	70	-	70/89	33	31,0	57/57	77/--	15,5/--	4,3	6,0x4,3	23

Last modified: 27.03.2018. All data is provided to the best of our knowledge and awareness and is subject to error and amendment.