Your contact:
+49-(0)2 12-88 04-0 • info@reo.de

Series WKO

Closed loop current transformers



Unique Selling Point

- Measurement of direct, alternating and mixed currents
- Very high precision and short response time
- Broad frequency spectrum and low temperature drift
- Very good linearity and overcurrent resistance
- No additional losses in the measuring circuit (DC to 150 kHz)
- Current output for lengthy transmission lines
- High-quality UL listed insulating materials (e.g. UL94-V0)
- Safe electrically isolated primary and secondary circuits
- Robust housing designs (for horizontal/vertical mounting)
- Variable connections, e.g. clamps, plugs, flat-cable plugs or cables
- Wide range of housings with various push-through openings

Description

WKO current sensors work in accordance with the proven compensation principle and are suitable for measuring direct, alternating and mixed currents.

The primary current generates a magnetic flux, which is compensated by an internal secondary coil. The current is evaluated by an electronic circuit and a Hall sensor. The secondary compensating current is a precise representation of the primary current to be measured.

According to:

- EN50178
- EN50121, EN55011
- IEC61869-1, IEC61869-8, IEC61010-1
- UL94-V0 – UL Norm: all parts are UL-listed

Applications

- Power Electronics : AC DC motor control , inverter technology , drive control
- Railway Technology: drive control
- Renewable energy : wind turbines control, monitoring

General technical data:

- Accuracy: better than 1%
- Ambient temperature: -25°C ... +70°C
- Storage temperature: -25°C ... +85°C

Technical Data

- Primary rated current : 25 - 2000 A
- Frequency range : 100000 - 200000 Hz

Mode of Operation

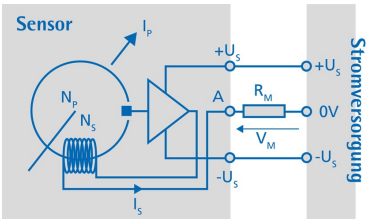

Your contact:
+49-(0)2 12-88 04-0 • info@reo.de

Series WKO

Closed loop current transformers

Technical data

Electrical data

Type	Primary RMS Nominal current IPN [A]	Measurement range IP [A]	Supply UC [V]	Accuracy XG@Ipn [-20...70°C] von IPN [%]	Ratio KN	Secondary RMS Nominal current ISN [mA]	Secondary winding current Widerstand Rs@70°C [Ω]	No load Current [mA]
WKO 25	25	0 ... ±35	±12...15	< ±0,9	1000	25	16	36+IS
WKO 50	50	0 ... ±70	±12...15	< ±1	1000	50	43	11+IS
WKO 100	100	0 ... ±150	±12...15	< ±1	1000	100	24	36+IS
WKO 300	300	0 ... ±500	±12...15	< ±1	2000	150	30	36+IS
WKO 500	500	0 ... ±1000	±15...24	< ±1	5000	100	72	36+IS
WKO 1000	1000	0 ... ±1500	±15...24	< ±1	5000	200	48	24+IS
WKO 2000	2000	0 ... ±3000	±15...24	< ±1	5000	400	27	78+IS

Accuracy and dynamic data

Type	Linearity error e [%]	Offset error@25°C IO [mA]	Offset Drift -25°C ...+70°C IOT [mA]	Reaction time tra[µs]	Response time 10%-90% ta[µs]	dI/dt [A/µs]	Bandwith -1dB [kHz]
WKO 25	< ±0,1	< 0,3	< 0,5	< 0,5	< 1	> 50	DC...150
WKO 50	< ±0,1	< 0,3	< 0,5	< 0,5	< 1	> 50	DC ... 200
WKO 100	< ±0,1	< 0,4	< 1	< 0,5	< 1	> 100	DC .. 100
WKO 300	< ±0,1	< 0,2	< 0,5	< 0,5	< 1	> 100	DC .. 100
WKO 500	< ±0,1	< 0,2	< 0,5	< 0,5	< 1	> 100	DC .. 100
WKO 1000	< ±0,1	< 0,3	< 0,5	< 0,5	< 1	> 100	DC .. 100
WKO 2000	< ±0,1	< 0,5	< 0,5	< 0,5	< 1	> 100	DC .. 100

Isolation data

Type	Creepage path dCp [mm]	Air path dCi [mm]	Creepage Strength[CTI]	AC –Isolation test 50/60Hz 1min Ud [kV]	Pulse voltage test 1,2/50µs Ui[kV]	Measures [kg]
WKO 25	4	3	600	3,8	6	0,08
WKO 50	8	7	600	3,8	6	0,022
WKO 100	10	9	600	3,8	6	0,125
WKO 300	10	9	600	3,8	6	0,125
WKO 500	10	9	600	6	12,5	0,240
WKO 1000	15	12	600	6	14,5	0,450
WKO 2000	25	21	600	6	14,5	1,620

Last modified: 27.03.2018. All data is provided to the best of our knowledge and awareness and is subject to error and amendment.

Your contact:
+49-(0)2 12-88 04-0 • info@reo.de

Series WKO

Closed loop current transformers

Maximum measuring resistance

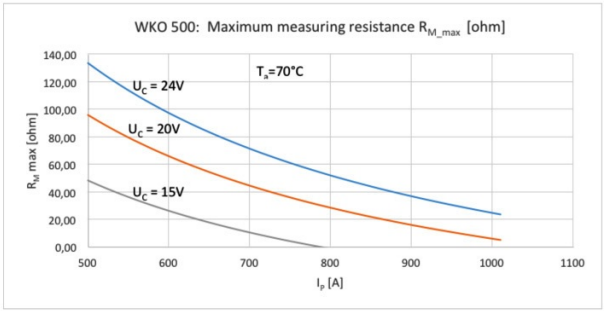

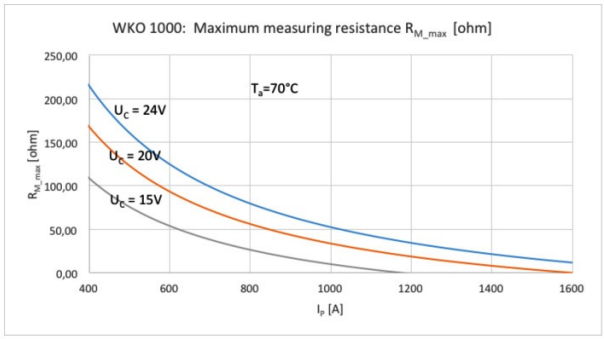

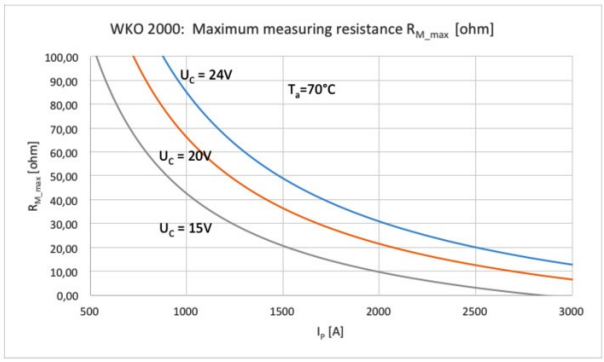

Your contact:
+49-(0)2 12-88 04-0 • info@reo.de

Series WKO

Closed loop current transformers

Dimension drawings

Design 25 A - FS 6,3 x 0,8

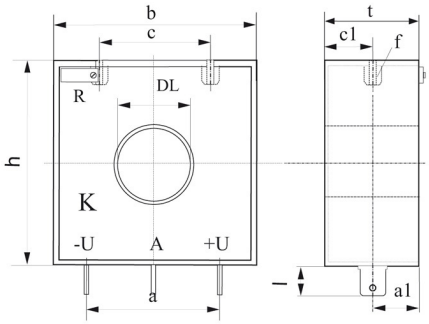

Design 50 A - Lötpin

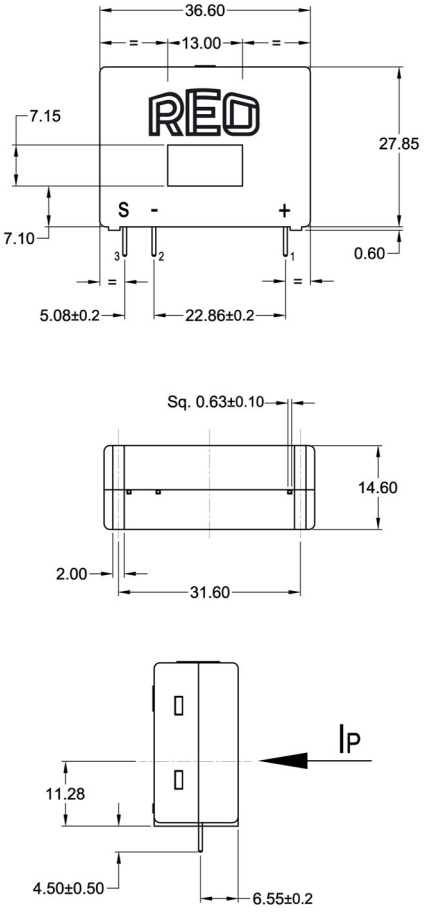

Design from 100 A - Molex 6410

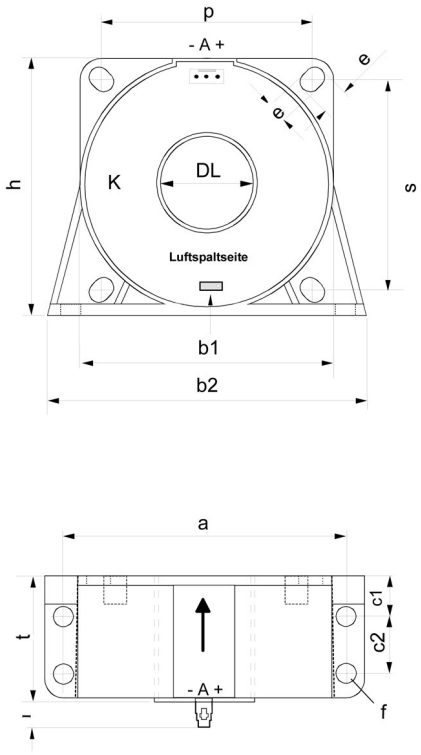

Dimensions

Type	PIN-Connection 3polig	h [mm]	b [mm]	b1 / b2 [mm]	t [mm]	DL [mm]	p / s [mm]	a / a1 [mm]	a [mm]	c1 / c2 [mm]	f [mm]	e [mm]	l [mm]
WKO 25	-U A +U	39	39	-	26	10	-	2x10 / 6,5	-	25 / 6,5	M3	6,0 x 4,0	9
WKO 50	please find in drawing												
WKO 100	-U A +U	55	-	55 / 68	26	20,2	45 / 45	-	60	13,0 / --	4,3	6,0 x 4,0	12
WKO 300	-U A +U	55	-	55 / 68	26	20,2	45 / 45	-	60	13,0 / --	4,3	6,0 x 4,0	12
WKO 500	+U A -U	70	-	70 / 89	33	31,0	57 / 57	-	77	15,2 / --	43	6,0 x 4,3	12
WKO 1000	+U A -U	95	-	94 / 110	44	40,0	78 / 78	-	100	18,0 / --	5,3	8,0 x 5,3	12
WKO 2000	-U A +U	141	-	138 / 170	55	64,0	120 / 120	-	150	18 / 25	6,5	6,2 x 10	12

Last modified: 27.03.2018. All data is provided to the best of our knowledge and awareness and is subject to error and amendment.