Contatti REO Italia:
+39 030 279 3883 •
info@reoitalia.it

REOTRON MEW 700

Thyristor controller



Unique Selling Point

- Current, voltage or power control
- Switchable for phase-angle or burst-fire control up to 300 A
- With integrated semiconductor fuses
- Interfaces: RS232, Profibus
- Internal setpoint adjustment using display, external with potentiometer
- Effective value feedback: current voltage or power

Description

REOTRON MEW series, single-phase, microprocessor-based, thyristor-controllers are suitable for resistive or resistive/inductive loads, especially those with a high Rcold / Rwarm coefficient. Status relays indicate unit ready and fault conditions. Depending on settings, the controller normally operates on the phase-angle principle (standard setting). It can also be used in a burst-fire mode. Phase-angle mode the unit works as a regulator for RMS current, RMS voltage or power. Adjustment is variable.
External setpoint signals can be used for controlling current, voltage and power or potentiometers may be used instead. A serial RS232, PROFIBUS-DP field bus interface can be used for remote adjustment. All unit settings can be made through the controller?s front-panel, using a LED display and keypad In theThe proportional regulation.

Applications:

- Industrial ovens
- Steam generators
- Lighting systems
- Infra-red dryers
- Pre-heating equipment
- Heating and ventilating equipment
- Heating tunnels

Technical Data

- Input voltage : 230 / 400 V AC +/-10 %
- Output voltage : 0...Ue V
- Output Current : max. 300 A
- Input voltage switchable : 230 - 400 V

Circuit drawing

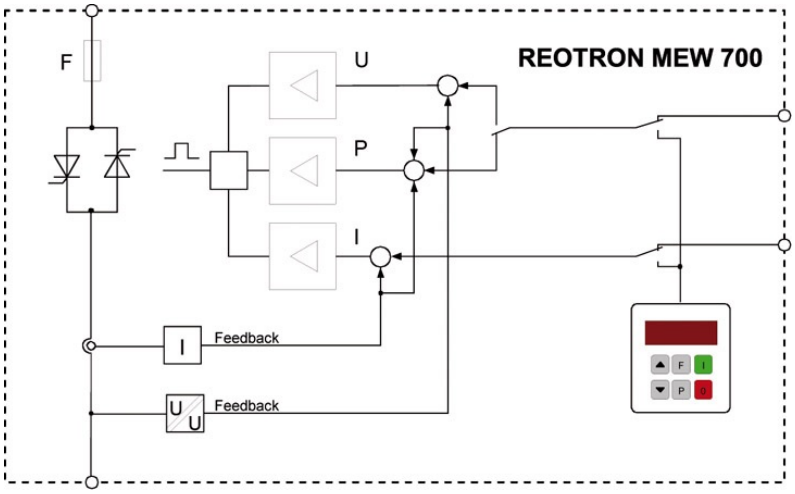

Last modified: 11.04.2019. All data is provided to the best of our knowledge and awareness and is subject to error and amendment.

Contatti REO Italia:
+39 030 279 3883 •
info@reoitalia.it

REOTRON MEW 700

Thyristor controller

Technical data

Type	Input voltage	Output voltage	Output current
REOTRON MEW 700-10	230 V AC, +/- 10% 400 V AC, +/-10 % 50/60 Hz	0...Ue-3V	10 A
REOTRON MEW 700-25			25 A
REOTRON MEW 700-50			50 A
REOTRON MEW 700-80			80 A
REOTRON MEW 700-110			110 A
REOTRON MEW 700-150			150 A
REOTRON MEW 700-200			200 A
REOTRON MEW 700-300			300 A

Load type:	Resistive / Inductive
Setpoint: Current, voltage, power	0...+10 V, DC 0(4)...20 mA Internal keyboard
Bus: (Option)	DeviceNet, ProfiBus, CanBus, EtherCAT, EtherNet/IP und ProfiNet
Enable input:	24 V, DC External contact (potential free)
Status message ready Status message performance on	Relais, changeover contact Relais, changeover contact
Actual monitor: Current / voltage	0...+10 V, DC
Operating temperature:	0...+45°C
Storage / transport temperature:	-10....+70°C
Protection rating:	IP 20

Last modified: 11.04.2019. All data is provided to the best of our knowledge and awareness and is subject to error and amendment.

Contatti REO Italia:
+39 030 279 3883 •
info@reoitalia.it

REOTRON MEW 700

Thyristor controller

Dimension drawing

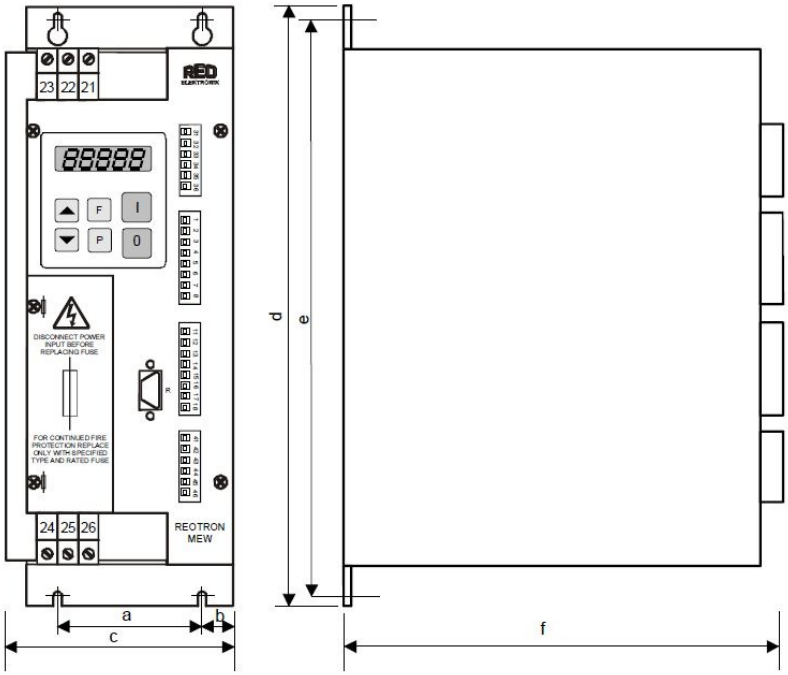

Type	a [mm]	b [mm]	c [mm]	d [mm]	e [mm]	f [mm]	Connection
MEW 10	30	10	70	205	193	154	Terminals
MEW 25	30	10	70	205	193	192	Terminals
MEW 50	70	15	110	290	280	215	Terminals
MEW 80	60	30	150	320	304	215	Terminals
MEW 110	90	30	180	320	304	215	Terminals
MEW 150	90	30	180	320	304	215	Terminals
MEW 200	180	12	204	430	415	250	CU-bar
MEW 300	180	12	204	430	415	250	CU-bar

Last modified: 11.04.2019. All data is provided to the best of our knowledge and awareness and is subject to error and amendment.