Your contact:
+49-(0)2 12-88 04-0 • info@reo.de

Series IN-B

Bushing-type and bar-type current transformers

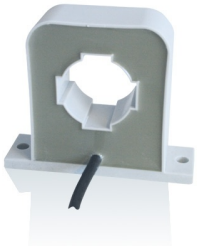

Unique Selling Point

- High reliability
- Category 1 Class B
- Current transformers for precise current measurements
- Measurements in the frequency range 16 2/3 to -50kHz
- Use of nanocrystalline and high-quality cores
- High-quality wires in temp-erature class F (155°C), H (180°C)
- High-quality UL listed insulating materials (e.g. UL94-V0)
- Safe electrically isolated primary and secondary circuits
- Non-critical in the event of overload currents
- Robust housing designs (for horizontal/vertical mounting)
- Shock and vibration tests in accordance with DIN EN 61373
- Variable connections: clamps, plugs, flat-cable plugs or cables
- Wide range of housings with various push-through openings

Description

For the high demands of railway and industrial engineering at higher frequencies up to 50kHz. High-quality nanocrystalline core materials guarantee the greatest degree of transmission quality and low losses.

Exclusive use of UL-listed materials, fully sealed with UL94-V0 material. Current transformers for demanding applications, such as in the railway sector and general transportation sectors. Robust housing construction with reliable securing options for vertical or horizontal mounting.

- According to: EN/IEC 61869-1/2
- Primary rated current: 600 A
- Frequency range: 50 - 50.000 Hz

Application area

- Industry
- Railway engineering

Technical Data

- Primary rated current : 600 A
- Max. Primärnennstrom : 720
- Sekundärstrom : 300 A

Mode of operation

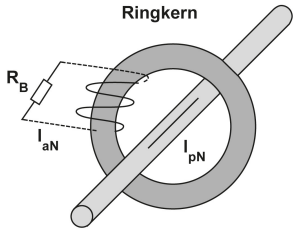

Your contact:
+49-(0)2 12-88 04-0 • info@reo.de

Series IN-B

Bushing-type and bar-type current transformers

Technical data

Type IN-B			600	
IPN	Primary rated current	r.m.s	600	[A]
ImaxPN	Max. primary rated current	r.m.s	720	[A]
IaN	Secondary current	r.m.s	300	[mA]
RB	Load resistance		10	[Ω]
URB	Voltage at load resistance	r.m.s	3	[V]
PSek	Power		0,9	[VA]
KN	Ratio	1:	2000	
FU	Measuring accuracy [50 Hz]	@ IPN, TA = 25°C	± 1	[%]
f	Frequency		0,05 up to 50	[kHz]
TA	Ambient temperature		-25 up to +70	[°C]
Vp	Insolation test	r.m.s 50 Hz	3	[kV]
General data				
Connection		3x0,5mm² shield	Cable	
Storage temperature			-25 up to +85	[°C]
Secondary coil resistance		@ TA = 25 °C	36,5	[Ω]
Weight			0,210	[kg]
Standards			EN61373	

Last modified: 12.10.2018. All data is provided to the best of our knowledge and awareness and is subject to error and amendment.

Your contact:
+49-(0)2 12-88 04-0 • info@reo.de

Series IN-B

Bushing-type and bar-type current transformers

Dimension drawings

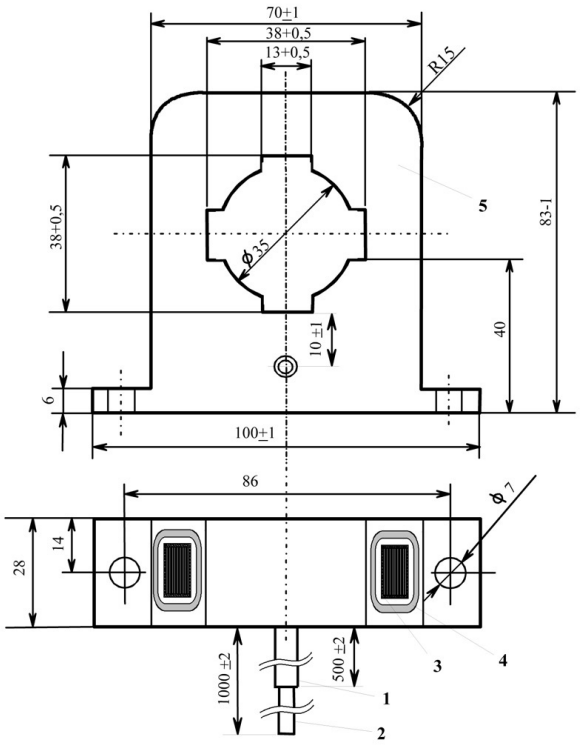

Last modified: 12.10.2018. All data is provided to the best of our knowledge and awareness and is subject to error and amendment.