Your contact:
+49-(0)2 12-88 04-0 • info@reo.de

Series IN-D

Differential current transformer

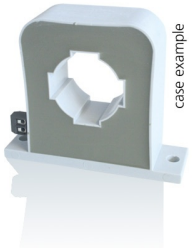

Unique Selling Point

- Measurement from 25 to 400 Hz
- Nanocrystalline core
- Transformer for measuring of differential current
- High-quality UL listed insulating materials (e.g. UL94-V0)
- Safe electrically isolated primary and secondary circuits
- Robust housing designs (for horizontal/vertical mounting)
- Variable connections
- Wide range of housings with various push-through openings
- Residual current range 2 - 50 A

Description

A differential current transformer permits the measurement of differential current in single-phase or three-phase supply cables or in individual lines. Both current-carrying conductors (outward conductor and return conductor) are led through the current opening of the current transformer. The current measurement is performed by comparing the two conductors.

Any difference is displayed at the output of the differential current transformer. The use of highly permeable materials permits a typical current deviation of 10 mA upwards. The wide opening allows the supply lines, with the exception of the earthing conductor, to be led through directly. High sensitivity to current enables measurement in several stages:

- stage 1: Notice of a malfunction
- stage 2: Alarm
- stage 3: Switching off

Application area

- Industry
- Renewable energy sources
- Metrology and testing techniques
- Energy, automation and building technology

Technical Data

- Primary rated current : 2 - 50 A

Mode of operation

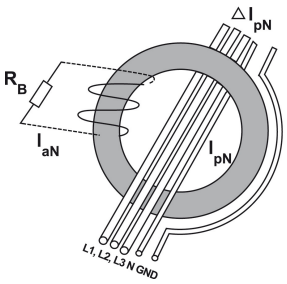

Last modified: 29.01.2020. All data is provided to the best of our knowledge and awareness and is subject to error and amendment.

Your contact:
+49-(0)2 12-88 04-0 • info@reo.de

Series IN-D

Differential current transformer

Technical data

Type IN-D		2	4	8	20	30	40	30	40	50	
		Design A			Design B			Design C			
ΔIPN	Primary rated current	0,1 - 1	0,1 - 2	0,1 - 4	0,1 - 10						[A]
ΔImaxPN	Max. primary rated current	2	4	8	20	30	40	30	40	50	[A]
ITK	Thermal short-time current	0,5			3,6			9			[kA]
IaN	Rated output current	2	4	4	20	10	5	20	16,67	10	[mA]
Psek	Power	0,004	0,008	0,016	0,030		0,015	0,06	0,05	0,06	[VA]
KN	Ratio	500		1000	500	1000	2000	500	600	1000	[1:]
URB	Load voltage	2,0		4,0	1,5	3,0				6,0	[V]
RB	Load resistance	1000	500	1000	75	300	600	150	180	600	[Ω]
FU	Measuring accuracy 50 Hz	≤ 1,0									[%]
TA	Ambient temperature	-10 bis +50									[°C]
f	Frequency range	25 bis 400									[Hz]
VP	Isolation	3									[kVac]
General data											
A	Connection	Flat connection 6,3 x 0,8 / Plug MKS 1853 / Clamp 1,5 mm2									
TS	Storage temperature	-25 up to +85									[°C]
RS	Coil resistance	11		46	4,5	19	65	5,5	6,5	21	[Ω]
m	Weight	0,068		0,070	0,278		0,290	0,280		0,290	[kg]
	Standards	EN/IEC 61869-1/2									
CTI	Tracking resistance	Housing / resin 550/660M or 400/600M									
dCp	Creepage distance	18			8			18			[mm]
dCl	Air distance	16			7			16			[mm]

Last modified: 29.01.2020. All data is provided to the best of our knowledge and awareness and is subject to error and amendment.

Your contact:
+49-(0)2 12-88 04-0 • info@reo.de

Series IN-D

Differential current transformer

Dimension drawings

Design A

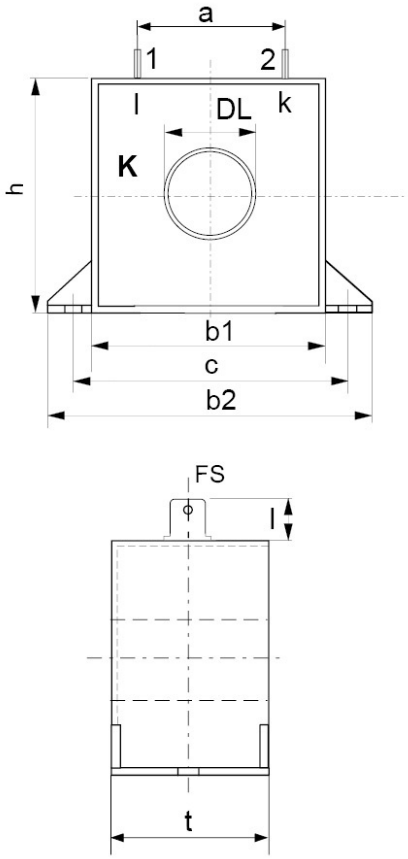

Design B

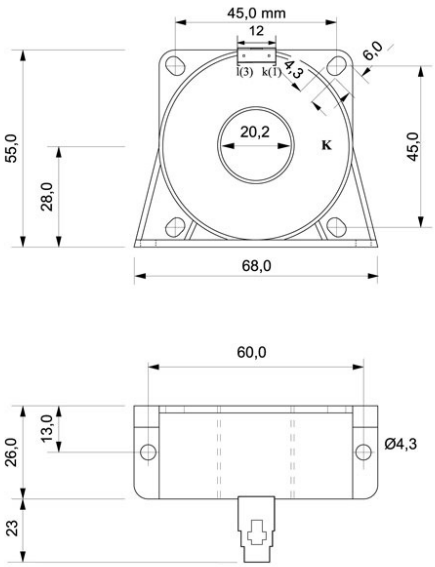

Design C

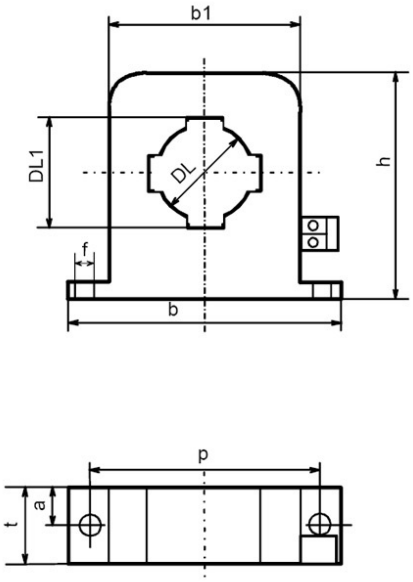

Dimensions

Type	Design	PIN-Connection	h [mm]	b1 / b2 [mm]	t [mm]	DL / DL1 [mm]	FS [mm]	p / s [mm]	a [mm]	c [mm]	f [mm]	e [mm]	l [mm]
IN-D / 2	A	1 - 2	38	38 / 54	20	13 / -	6,3 x 0,8	-	30	47	4,8	-	9
IN-D / 4	A	1 - 2	38	38 / 54	20	13 / -	6,3 x 0,8	-	30	47	4,8	-	9
IN-D / 8	A	1 - 2	38	38 / 54	20	13 / -	6,3 x 0,8	-	30	47	4,8	-	9
IN-D / 20	B	MKS1853	55	55 / 68	26	20,2 / -	-	45 / 45	60	13	4,3	6 x 4,0	23
IN-D / 30	B	MKS1853	55	55 / 68	26	20,2 / -	-	45 / 45	60	13	4,3	6 x 4,0	23
IN-D / 40	B	MKS1853	55	55 / 68	26	20,2 / -	-	45 / 45	60	13	4,3	6 x 4,0	23
IN-D / 30	C	Terminals	83	100 / 70	28	35 / 38	-	86 / -	14	-	7	-	-
IN-D / 40	C	Terminals	83	100 / 70	28	35 / 38	-	86 / -	14	-	7	-	-
IN-D / 50	C	Terminals	83	100 / 70	28	35 / 38	-	86 / -	14	-	7	-	-

Last modified: 29.01.2020. All data is provided to the best of our knowledge and awareness and is subject to error and amendment.