Contatti REO Italia:
+39 030 279 3883 •
info@reoitalia.it

REOTRON MDW 700

3-phase thyristor power controller



Unique Selling Point

- phase-angle or burst-fire controllers
- measuring of effective values
- connection via analog interfaces, potentiometers or field bus systems
- air- or water-cooling
- installation device for control cabinets

Description

REOTRON MDW thyristor controllers are used in industrial process engineering, especially in applications where accurate regulation of the load is required.

The MDW range can operate as phase-angle or in burst-fire mode as standard and is able to function as voltage, current or power regulators ensuring maximum versatility.

REOTRON MDW controllers can be directly connected to the load (Infrared heating) or can also be used for primary control of transformers for load isolation and allow more favourable combinations for operation of voltage/current (resistance heating applications)

The REOTRON MDW is a modern microprocessor controlled device with integrated monitoring of voltage and current to ensure that accurate regulation occurs.

Communication with the devices can be done using conventional analog interfaces (0...10V,DC or 0(4)...20 mA), potentiometer or field bus systems like DeviceNet, ProfiBus, CanBus, EtherCAT, EtherNet/IP and ProfiNet to allow easy integration into new or existing factory control networks.
To provide additional functionality the units also provide 0..+10V,DC analog outputs which are proportional to current and voltage. These can easily be interfaced to external measurement and supervisory systems.

The units have a wide variety of user adjustable parameters so that control can be tailored and optimized for the application, for example Current/Voltage Limit and ramp-up and ramp-down times. The REOTRON MDW range is protected to IP20 and is designed to be integrated into control cabinets.
They are air-cooled and above 150A have integral cooling fans. In addition to this, the REOTRON MDW-WK are designed for water-cooling and can easily be integrated into new or existing cooling systems.

Applications:

- Industrial ovens
- Metal- evaporations
- Melting Crucibles
- Infra-red dryers
- Heating equipment

Technical Data

- Output voltage : 400 V
- Output Current : 10 - 300 A
- Input voltage switchable : Eingangsspannung umschaltbar [V] V

Circuit diagram

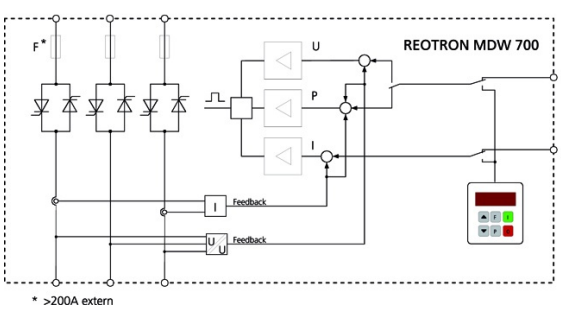

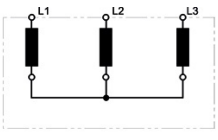

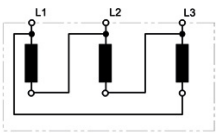

Last modified: 11.04.2019. All data is provided to the best of our knowledge and awareness and is subject to error and amendment.

Contatti REO Italia:
+39 030 279 3883 •
info@reoitalia.it

REOTRON MDW 700

3-phase thyristor power controller

Type	Input voltage	Output voltage	Output current
REOTRON MDW 700-10	3 x 400 VAC, +/-10 % 50/60 Hz	3 x 0...400V	3 x 10 A
REOTRON MDW 700-25			3 x 25 A
REOTRON MDW 700-50			3 x 50 A
REOTRON MDW 700-80			3 X 80 A
REOTRON MDW 700-110			3 x 110 A
REOTRON MDW 700-150			3 x 150 A
REOTRON MDW 700-200			3 x 200 A
REOTRON MDW 700-300			3 x 300 A
REOTRON MDW-WK 700-115 *			3 x 115 A
REOTRON MDW-WK 700-160 *			3 x 160 A
REOTRON MDW-WK-700-250 *			3 x 250 A
REOTRON MDW-WK 700-350 *			3 x 350 A
REOTRON MDW-WK 700-450 *			3 x 450 A
Load:	Resistive / inductive		
Set-point: Current, voltage, power	0...+10 V, DC, 0(4)...20 mA Internal keyboard		
Interface: (optional)	Profi bus-DP, CAN-Bus, DeviceNet, EtherCAT		
Input:	24 V, DC, external contact, (potential-free)		
Status update ready Status update power on	Relay, changeover contact Relay, changeover contact		
Display for effective value: Current / Voltage	0...+10 V, DC		
Operating temperature:	0...+45°C		
Storage / Transport temperature:	-10....+70°C		
Protection rating:	IP 20		

* with water cooling

Last modified: 11.04.2019. All data is provided to the best of our knowledge and awareness and is subject to error and amendment.

Contatti REO Italia:
+39 030 279 3883 •
info@reoitalia.it

REOTRON MDW 700

3-phase thyristor power controller

Dimension drawing

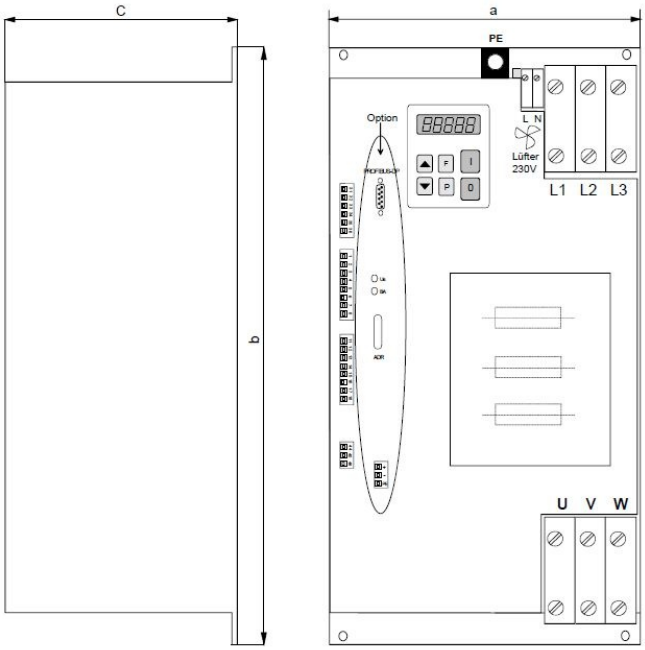

Type	a [mm]	b [mm]	c [mm]
MDW 700-10	160	290	205
MDW 700-25	160	290	205
MDW 700-50	255	320	200
MDW 700-80	255	320	200
MDW 700-110	255	430	210
MDW 700-150	255	430	210
MDW 700-200	255	430	210

Last modified: 11.04.2019. All data is provided to the best of our knowledge and awareness and is subject to error and amendment.