Contatti REO Italia:
+39 030 279 3883 •
info@reoitalia.it

RPD 9039

Three-phase load choke

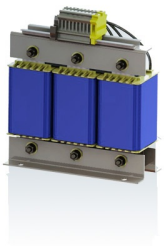

Unique Selling Point

- Small dimensions
- Cost effective solution

Description

Drive inverters or output filters must be tested at rated current by using typically motor-generators. Due to the high costs, the specimens can be loaded alternatively with chokes which have a sufficient linearity and does not exceed the temperature limit at higher frequencies.

- Cooling: AN
- Isolierstoffklasse: F
- Climatic categorie: 25/085/21 DIN IEC 68 Teil 1
- Max. winding temperature: 140 °C
- Protection rating: IP 00

Technical Data

- Nominal Voltage : 400 V
- Rated current : 0,6 - 75 A
- Inductance : 3,15 - 254 mH

Circuit example

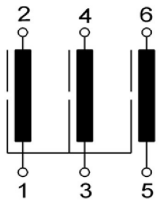

Last modified: 27.03.2018. All data is provided to the best of our knowledge and awareness and is subject to error and amendment.

Contatti REO Italia:
+39 030 279 3883 •
info@reoitalia.it

RPD 9039

Three-phase load choke

Technical data

Type	Rated voltage [V]	Rated current [A]	Inductance [mH]	DC resistance [mΩ]	Power loss [W]
RPD 9039/0,6	3 x 400	0,6	254	6009,2	20
RPD 9039/7,0		7	31,4	221,7	70
RPD 9039/32,0		32	8,550	34,3	230
RPD 9039/75,0		75	3,150	12,6	430

Dimension drawings

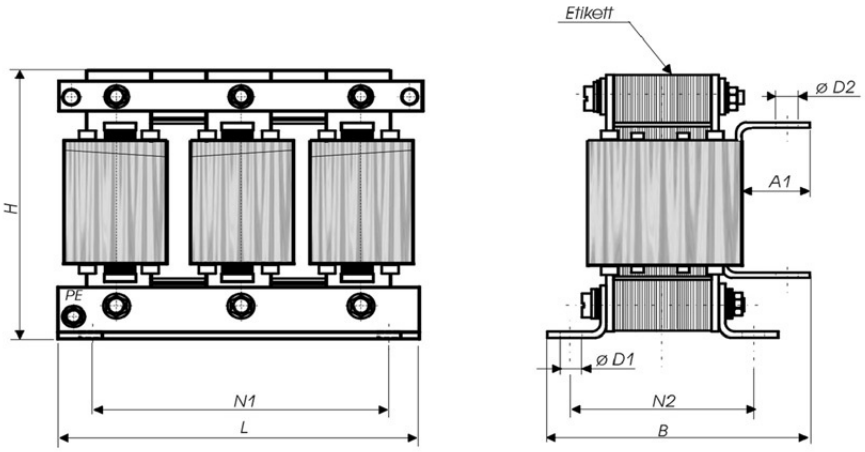

Dimensions

Type	L [mm]	B [mm]	H [mm]	N1 [mm]	N2 [mm]	øD1 [mm]	øD2 [mm]	A1 [mm]	Copper [kg]	Weight [kg]
RPD 9039/0,6	125	91	85	100	52	5 x 8	9	33,1	1	2
RPD 9039/7,0	190	123	157	170	79	8 x 12	9	34,5	3	10
RPD 9039/32,0	300	168	264	224	120	10 x 18	9	34,7	11	38
RPD 9039/75,0	360	182	313	264	142	10 x 18	9	35,7	18	58

Last modified: 27.03.2018. All data is provided to the best of our knowledge and awareness and is subject to error and amendment.