Contatti REO Italia:
+39 030 279 3883 •
info@reoitalia.it

NPT 892

Single-phase DC test choke



Unique Selling Point

- Adapted linearity, no saturation in the workspace
- Several taps, just a few chokes instead of many are needed
- Adjusted winding resistance, thereby reducing resistive loads
- Designed for continuous load and short-term exposure
- Optimizing weight and dimensions, lower costs
- High voltage, standard up to 1000V

Description

Switches must be pass many different tests during the approval phase. Some of these tests involve the switching behavior under different load conditions, the switch is tested on nominal load, overload and at many cos?. Additionally the switch will be checked on switch on and switch off procedures. The paramters must be everytime the same during this tests.

In the past, air chokes were used as inductive loads, since these do not saturate. Air chokes are larger and have a stronger leakage field than comparable core chokes with corresponding magnetic energy.

- Insulation class: F bei 40° C Umgebung
- Climatic categorie: 25/085/21 DIN IEC 68 Teil 1
- Max. winding temperature: 140° C
- Cooling: AF
- Protaction rating: IP 00

Technical Data

- Nominal Voltage : 24 V
- Rated current : 0,2 - 4 A
- Inductance : 160 - 125000 mH

Circuit example

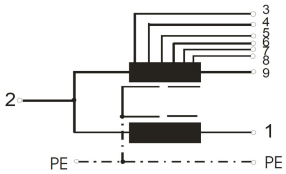

Last modified: 27.03.2018. All data is provided to the best of our knowledge and awareness and is subject to error and amendment.

Contatti REO Italia:
+39 030 279 3883 •
info@reoitalia.it

NPT 892

Single-phase DC test choke

Technical data

Type	Rated voltage [V]	Rated current [A]	Inductance [mH]	DC resistance [Ω]	Power loss [W]
NPT 892/0,2	24 50/60 Hz	0,2	125.000	197,3	20
NPT 892/2		2	1.200	2,855	-
NPT 892/4		4	160	2,8	64

Dimension drawings

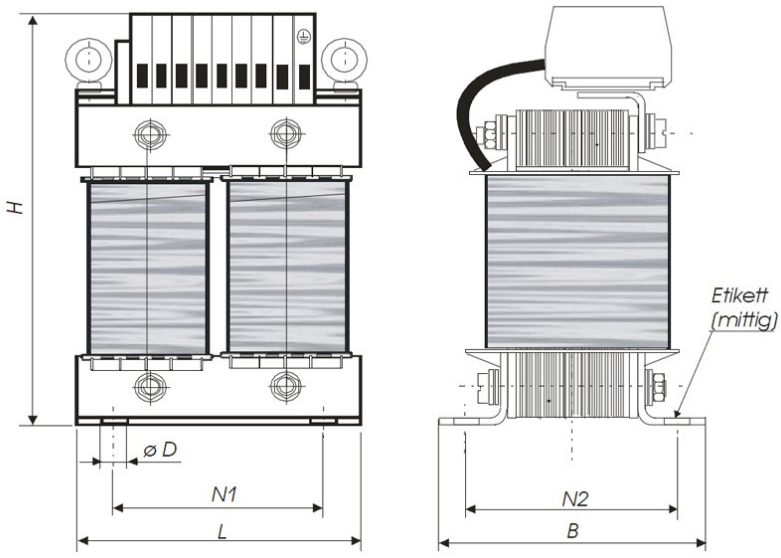

Dimensions

Type	L [mm]	B [mm]	H [mm]	N1 [mm]	N2 [mm]	øD1 [mm]	Copper [kg]	Weight [kg]
NPT 892/0,2	200	148	261	124	120	10x18	6,2	24,0
NPT 892/2	240	168	375	144	140	10x18	18,0	44,0
NPT 892/4	280	173	417	176	143	13x20	4,4	38,0

Last modified: 27.03.2018. All data is provided to the best of our knowledge and awareness and is subject to error and amendment.