Contatti REO Italia:
+39 030 279 3883 •
info@reoitalia.it

NPT 8919

Single-phase iron core choke

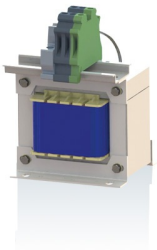

Unique Selling Point

- Robust design
- High flexibility
- Compact design
- Low losses

Description

These chokes are used in test laboratories as load chokes. They can be interconnected with each other. If these chokes used with appropriate resistors, a test under different cos (phi) is possible.

- Insulation class: F at 40° C
- Climaatic categorie: 25/085/21 DIN IEC 68 Part 1
- Max. winding temperature: 125° C
- Protaction rating: IP00

Technical Data

- Nominal Voltage : 230 - 600 V
- Rated current : 1,5 - 32,5 A
- Inductance : 0,031 - 71 mH

Circuit example



Last modified: 27.03.2018. All data is provided to the best of our knowledge and awareness and is subject to error and amendment.

Contatti REO Italia:
+39 030 279 3883 •
info@reoitalia.it

NPT 8919

Single-phase iron core choke

Technica data

Type	Rated voltage [V]	Rated current [A]	Inductance [mH]	DC resistance [mΩ]	Power loss [W]
NPT 8919 / 1,5	600	1,5	71	765	8,7
NPT 8919 / 2,8	600	2,8	35	188	8,5
NPT 8919 / 5,5	600	5,5	18	172	16
NPT 8919 / 22	600	22	4,5	34,6	41
NPT 8919 / 32,5	230	32,5	0,031	4,0	6,0
NPT 8919 / 32,5	230	32,5	0,063	4,5	9,0
NPT 8919 / 32,5	230	32,5	0,031	6,6	14,0

Dimension drawings

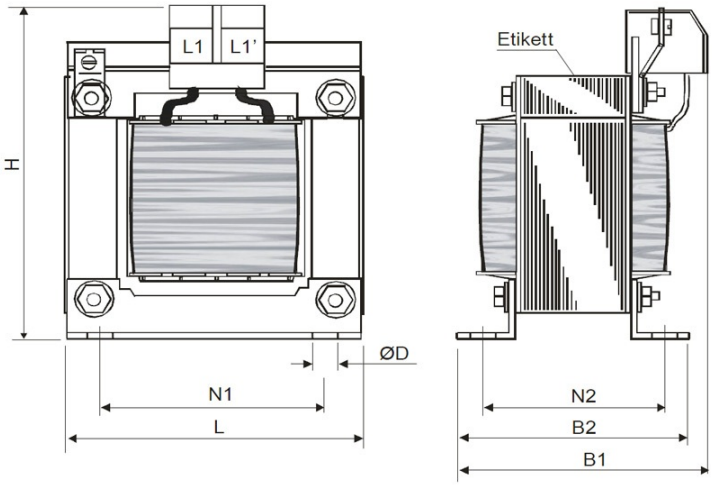

Dimensions

Type	L [mm]	B1 [mm]	B2 [mm]	H [mm]	N1 [mm]	N2 [mm]	øD1 [mm]	Connection [mm2]	Copper [kg]	Weight [kg]
NPT 8919 / 1,5	66,0	78,0	68,0	80,0	50,0	56,0	9 x 4,8	2,5	0,1	1,0
NPT 8919 / 2,8	78,0	66,0	60,0	56,0	56,0	47,0	9 x 4,8	2,5	0,29	
NPT 8919 / 5,5	85,0	100,0	76,0	110,0	64,0	63,0	9 x 4,8	0,0	0,45	2,2
NPT 8919 / 22	120,0	115,0	101,0	170,0	90,0	84,0	5,8 x 11,0	10,0	1,36	5,2
NPT 8919 / 32,5	66,0	71,0	55,0	115	50,0	42,0	4,8 x 9,0	6,0	0,19	0,7
NPT 8919 / 32,5	85,0	85,0	62,0	134,0	64,0	49,0	4,8 x 9,0	6,0	0,27	1,5
NPT 8919 / 32,5	85,0	100,0	76,0	125	64,0	63,0	4,8 x 9,0	6,0	0,34	2,0

Last modified: 27.03.2018. All data is provided to the best of our knowledge and awareness and is subject to error and amendment.