Contatti REO Italia:
+39 030 279 3883 •
info@reoitalia.it

NPT 8929

Single-phase test choke



Unique Selling Point

- Robust design
- High flexibility
- Compact design
- Low losses

Description

These chokes are used in test laboratories as load chokes. They can be interconnected with each other. If these chokes used with appropriate resistors, a test under different cos (phi) is possible.

- Insulation class: F at 40° C
- Climaatic categorie: 25/085/21 DIN IEC 68 Part 1
- Max. winding temperature: 125° C
- Protaction rating: IP00

Technical Data

- Nominal Voltage : 230 V
- Rated current : 0,5 - 32,5 A
- Inductance : 0,127 - 3180 mH

Circuit example



Last modified: 27.03.2018. All data is provided to the best of our knowledge and awareness and is subject to error and amendment.

Contatti REO Italia:
+39 030 279 3883 •
info@reoitalia.it

NPT 8929

Single-phase test choke

Technical data

Type	Rated voltage [V]	Rated current [A]	Inductance [mH]	DC resistance [mΩ]	Power loss [W]
NPT 8929 / 0,5	230	0,5	3180	55670,2	23
NPT 8929 / 1,25		1,25	1270	16880,0	43
NPT 8929 / 1,66		1,66	955	9977,8	47
NPT 8929 / 2,5		2,5	636	6388,5	66
NPT 8929 / 5		5,0	318	1782,5	94
NPT 8929 / 32,5		32,5	0,318	0,0	39
NPT 8929 / 32,5		32,5	0,127	7,0	13
NPT 8929 / 32,5		32,5	0,318	0,0	27

Dimension drawings

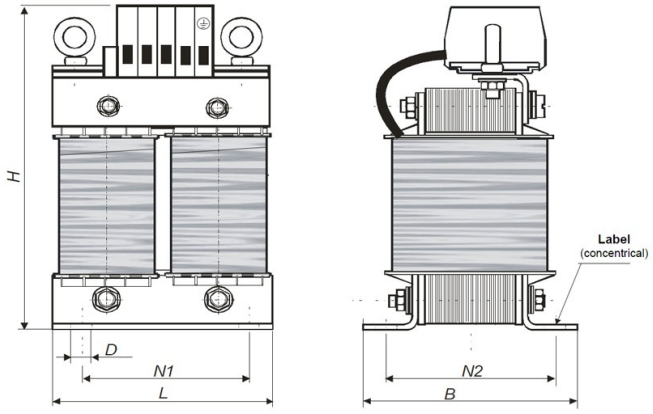

Dimesions

Type	L [mm]	B [mm]	H [mm]	N1 [mm]	N2 [mm]	øD1 [mm]	Connection [mm2]	Copper [kg]	Weight [kg]
NPT 8929 / 0,5	120	96	205	76	77	7 x 13	2,5	0,7	5,0
NPT 8929 / 1,25	160	105	265	100	81	7 x 13	2,5	2,0	9,8
NPT 8929 / 1,66	160	115	270	100	91	7 x 13	2,5	3,1	12,2
NPT 8929 / 2,5	200	122	310	124	94	10 x 18	4	3,9	17,0
NPT 8929 / 5	240	153	355	144	125	10 x 18	4	7,3	29,0
NPT 8929 / 32,5	120	96	208	76	77	7 x 13	16	0,84	6,5
NPT 8929 / 32,5	100	82	190	63	65	6 x 10	16	0,44	3,6
NPT 8929 / 32,5	120	96	208	76	77	7 x 13	16	0,94	6,5

Last modified: 27.03.2018. All data is provided to the best of our knowledge and awareness and is subject to error and amendment.