Contatti REO Italia:
+39 030 279 3883 •
info@reoitalia.it

REOVIB RTS 15

IP 54, for standalone application



Unique Selling Point

- Cost-effective phase-angle control systems with vital functionality
- IP54 design for standalone application
- Versions available with UL approval
- Output current up to 15 A

Description

REOVIB SMART RTS 15 devices are available in an IP 54 housing with output currents up to 15 A and are listed by UL.

Typical applications

- Conveyor & assembly automation
- Sorting systems

Technical Data

- Input voltage : 110 / 230 V
- Output voltage : 20...100 / 40...210 V
- Output Current : max. 15 A
- Input voltage switchable : Eingangsspannung umschaltbar [V] V

Last modified: 11.07.2018. All data is provided to the best of our knowledge and awareness and is subject to error and amendment.

Contatti REO Italia:
+39 030 279 3883 •
info@reoitalia.it

REOVIB RTS 15

IP 54, for standalone application

Technical data

Mains input	110 / 230V switchable
Mains frequency	50 / 60 Hz +/- 3 Hz
Output voltage	20...100 V / 40...210 V
Output current	max. 15 A
Vibration frequency	50 / 100 Hz (60 / 120 Hz)
Setpoint value	Potentiometer , 0...10V, 0...20 mA
Ext. Enable	24 V DC, Switch
Umin / Umax	Internal potentiometer
Soft start	Fixed
Mains voltage compensation	
Standards Conformity	UL, CE, RoHS
Protection class	IP54

Dimension drawing

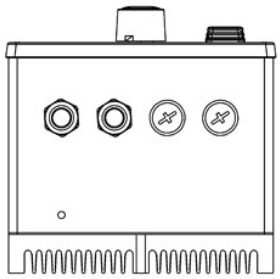

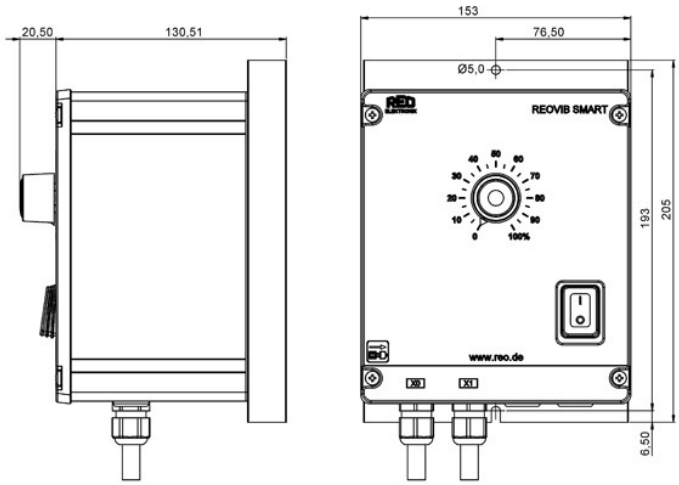

Last modified: 11.07.2018. All data is provided to the best of our knowledge and awareness and is subject to error and amendment.