Your contact:
+49-(0)2 12-88 04-0 • info@reo.de

REOHM series D 330

Watercooled, max. continous power: 60.000 W

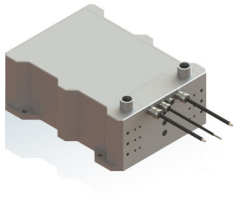

Unique Selling Point

- 88% space saving
- Drip-free quick fasteners
- Liquid cooling
- Low weight
- Low surface temperature

Description

The REO braking resistor D 330 converts excess braking energy into useful heat and is thus ideally suitable for electrical or hybrid drives. The water cooling makes an additional space saving of up to 88% possible as compared to a traditional air-cooled braking resistor. As an extra feature, the resistor can easily be connected with drip-free quick fasteners. Due to a very high performance even in confined spaces the BWD 330 is ideal for the use in wind power technology, too. Harsh environmental conditions, such as salt spray are no problem with the high protection degree up to IP 69K.

As BW (Braking resistor)

When an electric machine operates as a generator (Electromotive brake), the brake resistor protects the machine from a voltage rise in the intermediate circuit. The current reduces als the speed of the machine.

As R (Charging resistor, damping resistor, filter resistance, etc.)

The charging resistor is a current limiting resistor for the charging and discharging of capacitors and limitates for example the current flowing into the intermediate circuit capacitor inrush current. For this the device must be designed for a high single pulse energy and nominal voltage. The inductance of the resistor contributes to limit the inrush current, so wirewound resistors are the right choice.

Applications

- Electrical or hybrid drives
- Wind power
- Industrial applications

Maximum energy with minimum space

- Protection IP20 up to IP69 K
- Test voltage 2,5 kV AC
- Other power ratings on request

Optional

- With temperature switch

Technical Data

- Resistance values : 1 - 100 Ohm
- Continuous power : 15000 - 60000 W
- max. operating voltage : 800 V

Circuit example

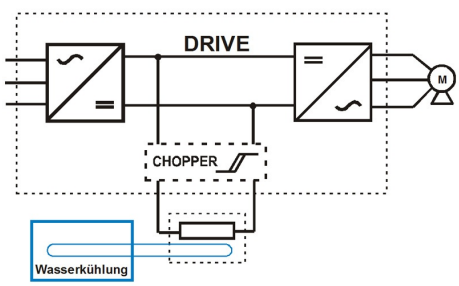

Last modified: 26.06.2020. All data is provided to the best of our knowledge and awareness and is subject to error and amendment.

Your contact:
+49-(0)2 12-88 04-0 • info@reo.de

REOHM series D 330

Watercooled, max. continous power: 60.000 W

Technical data

Type	Resistance value R [Ohm]	Continous power [W]	Operation voltage [V]
D 330 / 15.000	1 - 100	15.000	800
D 330 / 30.000		30.000	
D 330 / 45.000		45.000	
D 330 / 60.000		60.000	

Higher power ratings on request

In general: Is the ambient temperature higher than 40 °C, the continuous power must be reduced by 5 % per 10 K temperature rise.

Last modified: 26.06.2020. All data is provided to the best of our knowledge and awareness and is subject to error and amendment.

Your contact:
+49-(0)2 12-88 04-0 • info@reo.de

REOHM series D 330

Watercooled, max. continous power: 60.000 W

Dimension drawings

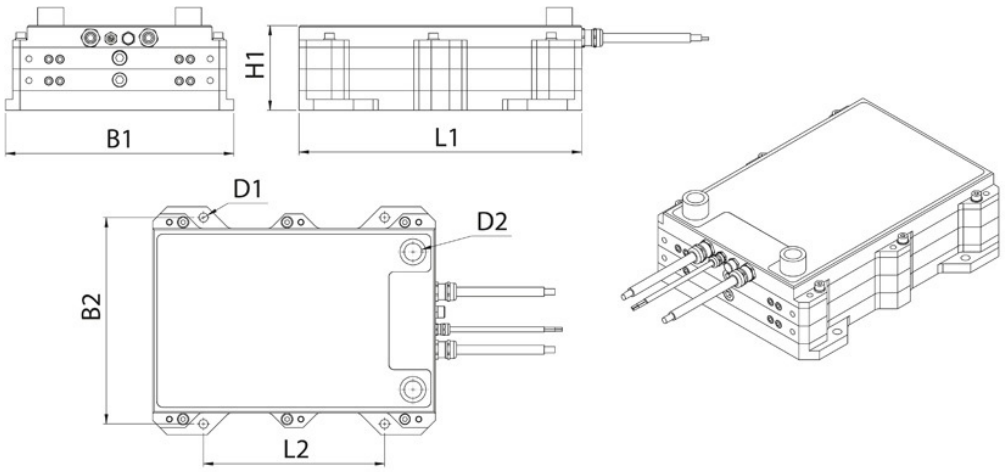

Dimensions

Type	L1 [mm]	L2 [mm]	B1 [mm]	B2 [mm]	D1 Ø [mm]	D2 Ø [mm]	H1 [mm]
D 330 / 15.000	390	250	315	285	12,5	G3/4	57
D 330 / 30.000	390	250	315	285	12,5	G3/4	87
D 330 / 45.000	390	250	315	285	12,5	G3/4	117
D 330 / 60.000	390	250	315	285	12,5	G3/4	147

Last modified: 26.06.2020. All data is provided to the best of our knowledge and awareness and is subject to error and amendment.

Your contact:
+49-(0)2 12-88 04-0 • info@reo.de

REOHM series D 330

Watercooled, max. continous power: 60.000 W

Resistance value in function of temperature

The resistance values refer to standard products with a standard tolerance of +/- 10 % with an ambient temperature of 20 °C. The resistance value insignificantly changes in function of the winding temperature. Therefore, resistance changes of approx. +10 % in comparison to the cooled-down conditions may occur.

Last modified: 26.06.2020. All data is provided to the best of our knowledge and awareness and is subject to error and amendment.