Contatti REO Italia:
+39 030 279 3883 •
info@reoitalia.it

REOVIB Accelerometers SW

IP 54, IP 65 - Die-cast aluminum

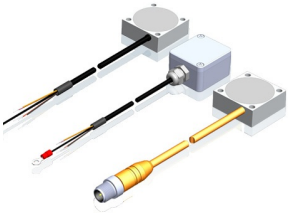

Unique Selling Point

- Aluminum Case
- Low-cost versions Available
- For harsh Environmental conditions (optional)
- Low weight
- Plug + Play functionality with REOVIB MFS 168 + 268 controllers and measuring devices REOVIB 6050 and 6100

Description

Sensor for measuring accelerations in the range of 0 ... 35 g (frequency dependent). The sensor includes a piezoelectric element with a downstream amplifier acceleration . The accelerations are detected by the piezoelectric element and converted into a voltage proportional to the acceleration.

The amplifier takes the measurement signal in a form of 100 /150/ 300 /600/ 2000 mV / g. All components are housed in a robust aluminum housing and completely sealed. The electrical connection is via a 4-wire (or 3 -wire), shielded cable. The shield must be grounded at the signal processing device .

Applications

- Control and monitoring of conveyor drives
- Detection of mechanical vibrations
- Monitoring of acceleration or braking action

Technical Data

- Frequency range : 30 - 150, 10 - 60, 5 - 20 Hz
- Measurement signal : 100 - 2000 mV/g

Mounting

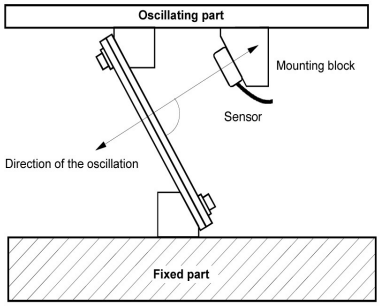

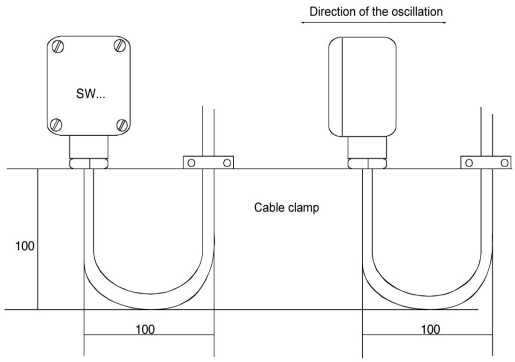

The acceleration sensor line must be intercepted with a cable clamp to prevent damage to the cable.

Last modified: 09.10.2019. All data is provided to the best of our knowledge and awareness and is subject to error and amendment.

Contatti REO Italia:
+39 030 279 3883 •
info@reoitalia.it

REOVIB Accelerometers SW

IP 54, IP 65 - Die-cast aluminum

Technical data

Type	SW ....
Operating voltage	+24 V DC
Output voltage	100 / 150 / 300 / 600 / 2000 mV / g
Measuring range	0...35 g (frequency-dependent)
Ambient temperature	0...+45 °C
Output current	2 mA

Type	ID-Nr.:	Measurement signal [mV/g]	Frequency range [Hz]	Connection	Cable length [m]	Protection rating	Housing
SW 07	045707	300	30...150	Cable with open ends	5	IP 65	die-cast aluminum
SW 80	045780	300	30...150	Cable with open ends	16	IP 65	die-cast aluminum
SW 85	045785	300	30...150	M12 plug, 4-pin	5	IP 65	die-cast aluminum
SW 40	045740	600	10...60	Cable with open ends	5	IP 65	die-cast aluminum
SW 42	045742	600	10...60	Cable with open ends	15	IP 65	die-cast aluminum

Type	ID-Nr.:	Measurement signal [mV/g]	Frequency range [Hz]	Connection	Cable length [m]	Protection rating	Housing
SW 61	045761	100	60...250	Cable with open ends	5	IP 54	aluminum encapsulation
SW 62	045762	100	60...250	M12 plug, 4-pin	5	IP 54	aluminum encapsulation
SW 10	045710	300	30...150	Cable with open ends	2	IP 54	aluminum encapsulation
SW 50	045750	300	30...150	Cable with open ends	5	IP 54	aluminum encapsulation
SW 51	045751	300	30...150	Cable with open ends	10	IP 54	aluminium encapsulation
SW 52	045752	300	30...150	Cable with open ends	15	IP 54	aluminum encapsulation
SW 54	045754	300	30...150	Cable with open ends	30	IP 54	aluminum encapsulation
SW 70	045770	300	30...150	M12 plug, 4-pin	2	IP 54	aluminium encapsulation
SW 69	045769	300	30...150	M12 plug, 4-pin	3	IP 54	aluminum encapsulation
SW 71	045771	300	30...150	M12 plug, 4-pin	5	IP 54	aluminum encapsulation
SW 68	045768	300	30...150	M12 plug, 4-pin	10	IP 54	aluminum encapsulation
SW 67	045767	300	30...150	M12 plug, 4-pin	15	IP 54	aluminum encapsulation
SW 30	045730	600	10...60	Cable with open ends	2	IP 54	aluminum encapsulation
SW 29	045729	600	10...60	Cable with open ends	3	IP 54	aluminum encapsulation
SW 27	045727	600	10...60	Cable with open ends	10	IP 54	aluminum encapsulation
SW 26	045726	600	10...60	Cable with open ends	15	IP 54	aluminum encapsulation
SW 72	045772	600	10...60	M12 plug, 4-pin	2	IP 54	aluminum encapsulation
SW 73	045773	600	10...60	M12 plug, 4-pin	5	IP 54	aluminum encapsulation
SW 74	045774	600	10...60	M12 plug, 4-pin	10	IP 54	aluminum encapsulation
SW 75	045775	600	10...60	M12 plug, 4-pin	15	IP 54	aluminum encapsulation
SW 14	045714	2000	5...20	Cable with open ends	10	IP 54	aluminum encapsulation

Last modified: 09.10.2019. All data is provided to the best of our knowledge and awareness and is subject to error and amendment.

Contatti REO Italia:
+39 030 279 3883 •
info@reoitalia.it

REOVIB Accelerometers SW

IP 54, IP 65 - Die-cast aluminum

Dimension Drawing

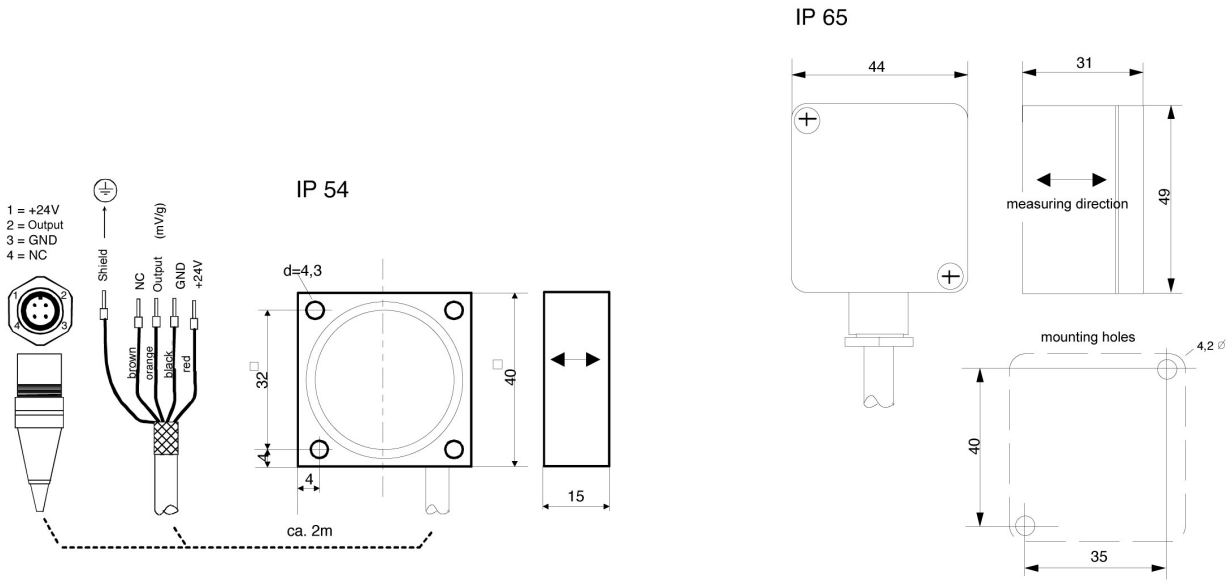

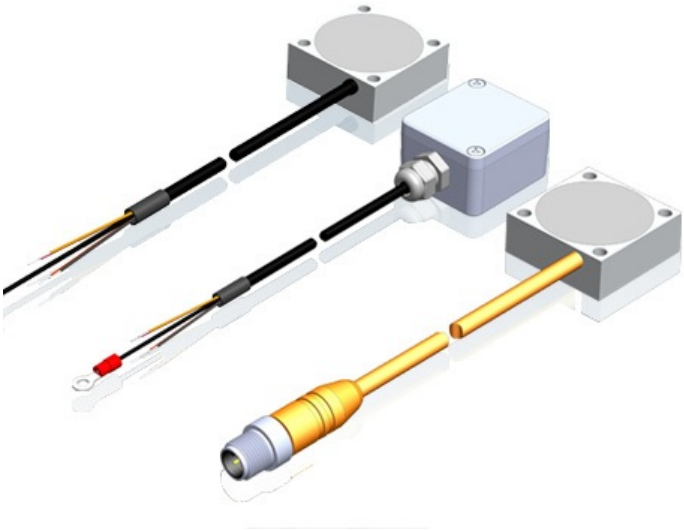

Last modified: 09.10.2019. All data is provided to the best of our knowledge and awareness and is subject to error and amendment.