Your contact:
+49-(0)2 12-88 04-0 • info@reo.de

RFT-VV

Toroidal fixed transformers, fully sealed



Unique Selling Point

- Fully sealed in plastic housing
- High efficiency level
- Very low open-circuit losses
- No audible noise
- Low voltage drop
- Protection class IP 54
- Low magnetic stray field
- Optimal mechanical protection
- Protection against humidity and dust
- Regular heat distribution
- Connection with wires, stranded wires or
- clamps according to VGB 4

Description

Toroidal transformer fully sealed as mains transformer, autotransformer, safety isolating transformer, isolating transformer.

All benefits of the toroidal transformer are combined in fully sealed toroidal transformers in a special plastic housing. The shape of the housing can be adapted exactly to the application. The plastic housing provides optimal mechanical protection against humidity and dust and provides in addition better heat conduction which leads to an increased power density.

The mounting is carried out by means of a central screw and allows therefore a short mounting time.

- Conform to: EN 61558-2-6, EN 61558-2-4, EN 61558-2-1
- Maximum production : up to 6 kVA
- Voltages: 24 up to max. 690V
- Frequency range: 50-400Hz
- Rated currents: up to 50 A
- Temperature class: T40/E und T40/B

Special voltages and higher capacities on request

Technical Data

- Rated power : 10 - 6000 VA
- Input voltage : 230 V

Efficient reduction of costs and energy

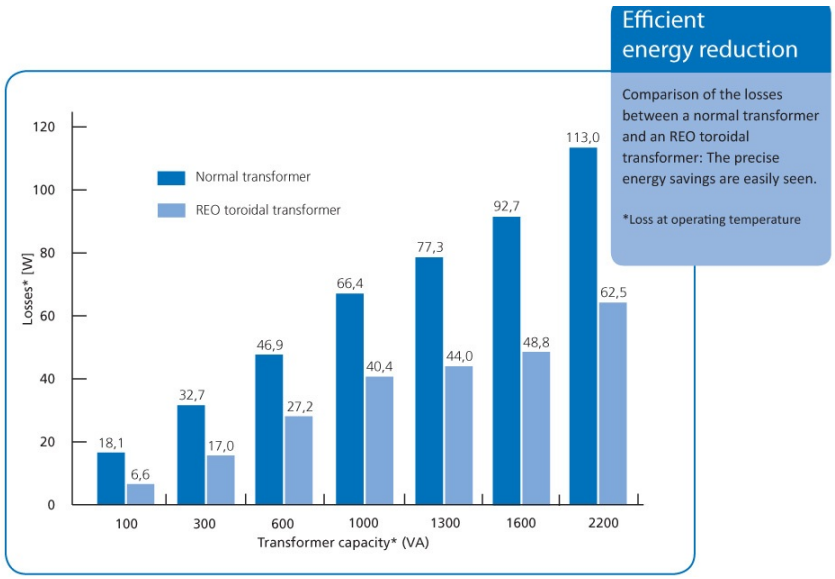

Last modified: 27.03.2018. All data is provided to the best of our knowledge and awareness and is subject to error and amendment.

Your contact:
+49-(0)2 12-88 04-0 • info@reo.de

RFT-VV

Toroidal fixed transformers, fully sealed

Technical data

Type	Rated power [VA]	Voltage Input [V]	Voltage Output [V]	Current at output 230V [A]	G-Cu [kg]	eta [%]	Io [mA]	delta-U [Factor]	Po [W]
RFT-VV-10	10	230	24 - max. 690	0,04	0,10	83	3	1,18	0,15
RFT-VV-20	20	230	24 - max. 690	0,09	0,13	83	3	1,17	0,30
RFT-VV-30	30	230	24 - max. 690	0,13	0,19	86	5	1,13	0,50
RFT-VV-50	50	230	24 - max. 690	0,22	0,35	88	6	1,12	0,60
RFT-VV-80	80	230	24 - max. 690	0,35	0,50	90	9	1,10	0,80
RFT-VV-100	100	230	24 - max. 690	0,43	0,40	92	11	1,08	1,00
RFT-VV-120	120	230	24 - max. 690	0,52	0,53	92	12	1,07	1,30
RFT-VV-150	150	230	24 - max. 690	0,65	0,60	93	13	1,07	1,30
RFT-VV-200	200	230	24 - max. 690	0,87	0,87	93	16	1,06	1,70
RFT-VV-250	250	230	24 - max. 690	1,09	1,07	94	20	1,06	1,90
RFT-VV-300	300	230	24 - max. 690	1,30	1,10	94	22	1,06	2,20
RFT-VV-400	400	230	24 - max. 690	1,74	1,62	94	27	1,05	2,70
RFT-VV-500	500	230	24 - max. 690	2,17	1,90	95	37	1,05	3,80
RFT-VV-600	600	230	24 - max. 690	2,61	2,30	95	39	1,05	3,90
RFT-VV-1000	1000	230	24 - max. 690	4,35	3,00	96	70	1,03	7,50
RFT-VV-1200	1200	230	24 - max. 690	5,22	4,00	97	72	1,03	7,50
RFT-VV-2400	2400	230	24 - max. 690	10,43	6,70	97	125	1,02	13,00
RFT-VV-3000	3000	230	24 - max. 690	13,04	8,30	97	160	1,02	16,00
RFT-VV-3600	3600	230	24 - max. 690	15,65	9,80	97	190	1,02	19,00
RFT-VV-4200	4200	230	24 - max. 690	18,26	11,10	98	240	1,02	24,00
RFT-VV-4800	4800	230	24 - max. 690	20,87	13,20	98	270	1,01	27,50
RFT-VV-5400	5400	230	24 - max. 690	23,48	15,20	98	280	1,01	28,00
RFT-VV-6000	6000	230	24 - max. 690	26,09	15,90	98	320	1,01	32,00

Last modified: 27.03.2018. All data is provided to the best of our knowledge and awareness and is subject to error and amendment.

Your contact:
+49-(0)2 12-88 04-0 • info@reo.de

RFT-VV

Toroidal fixed transformers, fully sealed

Dimension drawing

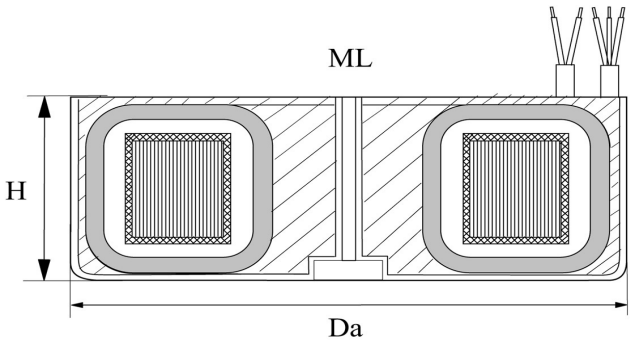

Dimensions

Type	Da [mm]	H [mm]	Total weight [kg]	Center hole (ML) [mm]	DIN 931-8.8 Screw 1x [mm]
RFT-VV-10	63	29,5	0,48	5,10	M5x40
RFT-VV-20	63	34,5	0,60	5,10	M5x45
RFT-VV-30	73	35	0,80	5,10	M5x45
RFT-VV-50	88	42	1,10	5,10	M5x50
RFT-VV-80	91	40	1,45	5,60	M5x50
RFT-VV-100	105	44	1,70	6,10	M6x55
RFT-VV-120	105	52	1,95	6,10	M6x60
RFT-VV-150	105	52	2,10	6,10	M6x60
RFT-VV-200	115	53	2,60	6,10	M6x60
RFT-VV-250	126	65	3,20	6,10	M6x75
RFT-VV-300	126	65	3,70	6,10	M6x75
RFT-VV-400	134	70	4,60	8,20	M8x80
RFT-VV-500	148	65	4,90	8,20	M8x75
RFT-VV-600	152	82	6,40	8,20	M8x90
RFT-VV-1000	175	85	10,00	10,30	M10x95
RFT-VV-1200	175	95	11,50	10,30	M10x105
RFT-VV-2400	211	98	19,00	10,30	M10x110
RFT-VV-3000	255	100	24,50	10,30	M10x110
RFT-VV-3600	255	115	28,50	10,30	M10x130
RFT-VV-4200	255	135	33,50	10,30	M10x150
RFT-VV-4800	285	125	39,00	12,00	M12x140
RFT-VV-5400	300	125	42,00	12,00	M12x140
RFT-VV-6000	300	135	46,50	12,00	M12x150

Last modified: 27.03.2018. All data is provided to the best of our knowledge and awareness and is subject to error and amendment.

Your contact:
+49-(0)2 12-88 04-0 • info@reo.de

RFT-VV

Toroidal fixed transformers, fully sealed

Mounting accessories

When ordering, please state:

Mounting accessories:

- 1 screw, DIN 931- 8.8

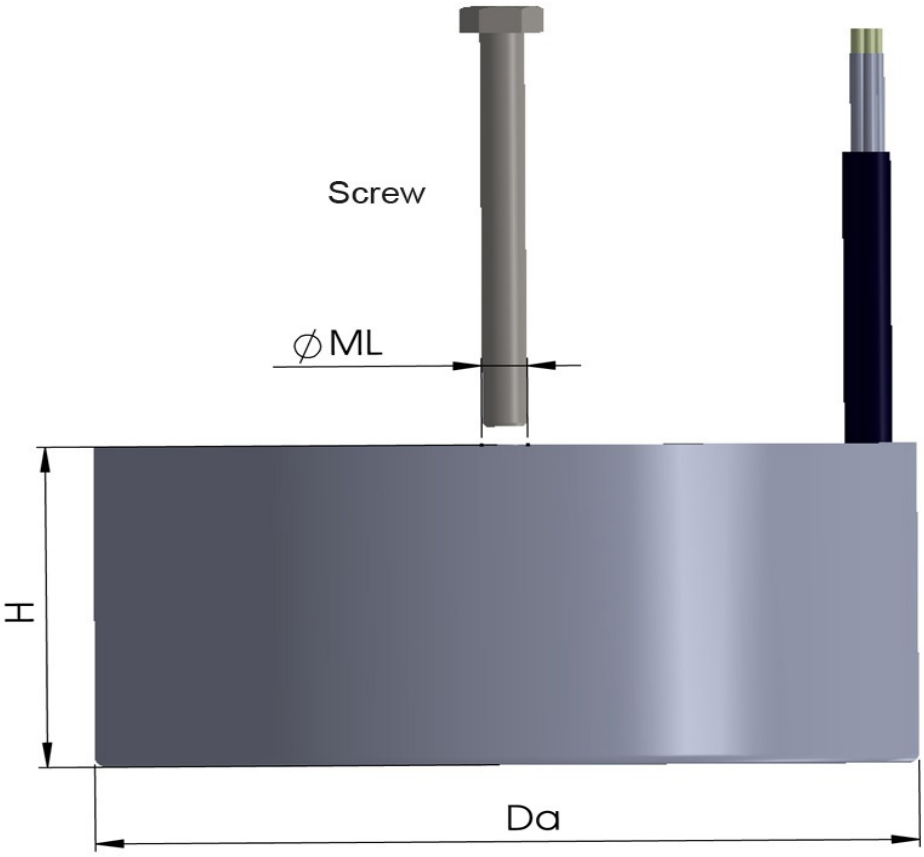

Last modified: 27.03.2018. All data is provided to the best of our knowledge and awareness and is subject to error and amendment.