Your contact:
+49-(0)2 12-88 04-0 • info@reo.de

REOVAR RRT/RRTW

Single-phase toroidal variable transformers (auto windings, open, IP 00)



Unique Selling Point

- Closely stepped adjusting of output voltages
- Frequencies of 50 - 400 Hz
- No EMC-Problems
- Low heat dissipation
- Comparatively large loads with small dimensions
- Wide range of accessories

Description

REOVAR toroidal transformers from the market leader for variable transformers regulate the output voltage in fine steps at constant current at the output. Our toroidal transformers are suitable for frequencies of 50 - 400 Hz - other frequencies on request.

The particular advantage of this series is to maintain the sinusoidal shape - like that, EMC problems cannot occur. The special winding core of REO produces no stray fields and low voltage case .

Type RRT/RRTW with an adjustable spindle to allow table or wall mounting. Sizes M4 - M61 have an optional center fixing nut.

- Input voltage: 230 V 50/60 Hz
- Output voltage 0-230 V oder 0-260 V
- Ambient temperature max. 40° C
- Connection group IO

REO toroidal variable transformers conform to EN 61558-2-14

Technical Data

- Input voltage : 230 V
- Output voltage : 0 - 230 V
- Output Current : 1 - 32 A

Options

- Protection IP 20 - IP 54
- Motor drive, digital/analog
- seperate windings
- Versatile accessories: e.g.motor control TVR 6500

Circuit example

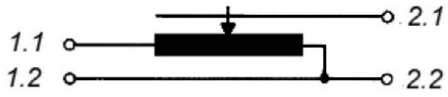

Last modified: 25.06.2020. All data is provided to the best of our knowledge and awareness and is subject to error and amendment.

Your contact:
+49-(0)2 12-88 04-0 • info@reo.de

REOVAR RRT/RRTW

Single-phase toroidal variable transformers (auto windings, open, IP 00)

Technical data

	0 - 230		0 - 260 V		Copper	Weight
	[A]	[kVA]	[A]	[kVA]	[kg]	[kg]
M4	1,0	0,23	0,85	0,22	0,07	1,6
M5	1,6	0,37	1,2	0,31	0,09	2,1
M61	3,2	0,735	2,8	0,73	0,14	3,1
M8	6,0	1,38	4,5	1,17	0,45	5,4
M10	10	2,3	8,0	2,08	0,9	8,8
M12	15	3,45	12	3,12	1,2	10,5
EN7	18	4,14	18	4,68	1,9	15,1
EN 9	25	5,75	25	6,5	2,7	20,0
EN10	32	7,36	32	8,3	3,3	21,0

Last modified: 25.06.2020. All data is provided to the best of our knowledge and awareness and is subject to error and amendment.

Your contact:
+49-(0)2 12-88 04-0 • info@reo.de

REOVAR RRT/RRTW

Single-phase toroidal variable transformers (auto windings, open, IP 00)

Dimension drawing

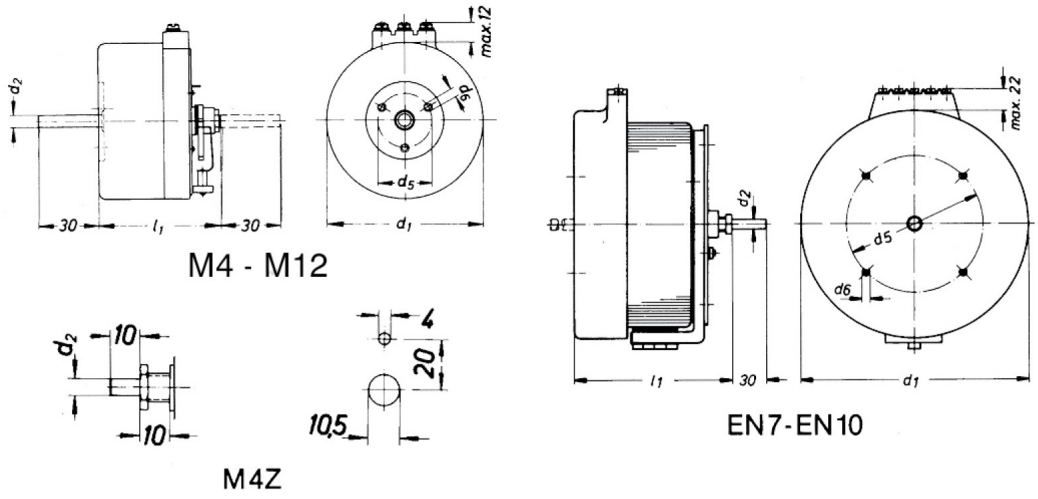

Dimensions

	L1	D1	D2	D5	D6
M4	77	92	6	26	M4
M5	93	92	6	26	M4
M61	98	103	6	26	M4
M8	131	125	10	80	M6
M10	133	157	10	95	M6
M12	131	175	10	95	M6
EN7	141	200	10	120	M6
EN 9	129	285	10	120	M6
EN10	129	285	10	120	M6

Last modified: 25.06.2020. All data is provided to the best of our knowledge and awareness and is subject to error and amendment.

Your contact:
+49-(0)2 12-88 04-0 • info@reo.de

REOVAR RRT/RRTW

Single-phase toroidal variable transformers (auto windings, open, IP 00)

Increase factor

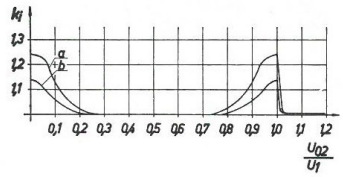

Factor ki expressed as a relationship to no load voltage (U02) over primary voltage (U1)
Curve a) Type M4, M7 - M12
Curve b) Type M5, M61, EN7 - EN10

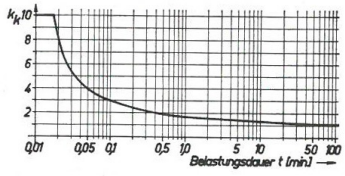

Factor kk relative to operation time t.

Maintenance:

The brush-roller has a sintered-bronze bearing, which is lubricated for two years of operation.

Seized or worn carbon rolls must be replaced immediately. From time to time the contact surfaces of the windings should be cleaned with a stiff brush to remove adhered dirt (dust and carbon abrasion).

Maintenance manual on request.

Accessories:

- Collet knob FZ 60 for M4 to M 61
- Collet knob FZ 90 for M7 to EN10
- Scale 90 for collet knob FZ 60
- Scale 120 for collet knob FZ 90

Last modified: 25.06.2020. All data is provided to the best of our knowledge and awareness and is subject to error and amendment.