Your contact:
+49-(0)2 12-88 04-0 • info@reo.de

NLR 7000

Control Unit for Motorised Variable Transformers



Unique Selling Point

- Easy handling
- For voltage stabilizer or as a current / voltage regulator
- Mounting horizontally or vertically

Description

Control unit for a motor -driven variable transformers

The REO controller NLR 7000 is used for constant adjustment of voltage or power at variable transformers .
The REO controllers NLR 7000.1 -3 is an electronic controller with following control options - all combined in one controller :

- NLR 7000. 1 = Variable AC control
- NLR 7000. 2 = variable DC control
- NLR 7000. 3 = constant voltage + _ 10-30 %

The control electronics of the NLR 7000 controls therefor the three-phase motor of the variable transformer. By programming, various applications are possible. The parameters are set via the LED display - also available with remote control .

- Protection: IP20
- Operating temperature: 0 ... + 45 ° C
- Storage temperature: -10 ... + 80 ° C
- Rel . Humidity: 80 % without condensation
- Pollution degree : 2
- Altitude : 1000 m 0.5 % nominal current reduction for each additional 100 m

Technical Data

- Input voltage : 230/3x400 V
- Frequency range : 50-60 Hz

Last modified: 27.03.2018. All data is provided to the best of our knowledge and awareness and is subject to error and amendment.

Your contact:
+49-(0)2 12-88 04-0 • info@reo.de

NLR 7000

Control Unit for Motorised Variable Transformers

Technical data

Type	NLR 7000
Input Voltage with attached neutral	230V 50-60 Hz 3x 400V 50-60 Hz
Input frequency	50 / 60 Hz
Output	constant, adjustable AC or DC
Motor power	370W
Motor for adjustment	Three phase 3x 400v Star
Maximum motor current	adjustable 0...100 %
Setpoint current	10k Potentiometer / 0...10VDC / 0(4)...20mADC
Setpoint voltage	10k Potentiometer / 0...10VDC / 0(4)...20mADC
Actual power	3 x 0...4,5VAC oder 0...5VDC
Actual voltage	3 x 0...440VAC (3x 254VAC gegen N) oder 0...5VDC

Dimension drawing

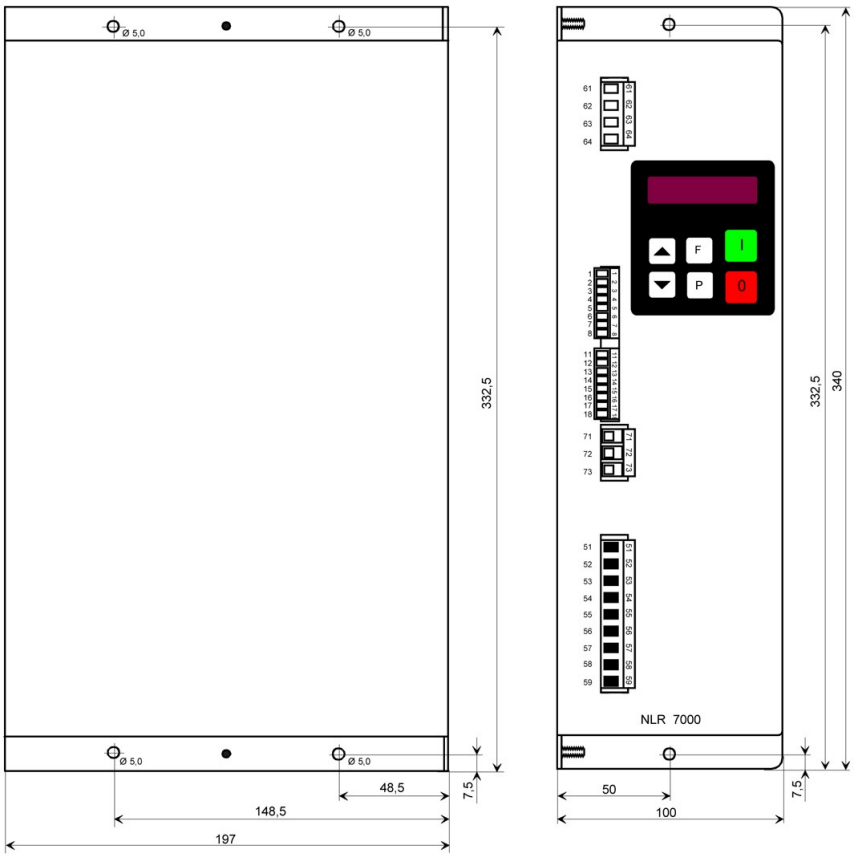

Last modified: 27.03.2018. All data is provided to the best of our knowledge and awareness and is subject to error and amendment.

Your contact:
+49-(0)2 12-88 04-0 • info@reo.de

NLR 7000

Control Unit for Motorised Variable Transformers

NLR 7000. 1= Variable AC Control

Current voltage regulation with potentiometer as setpoint input AC

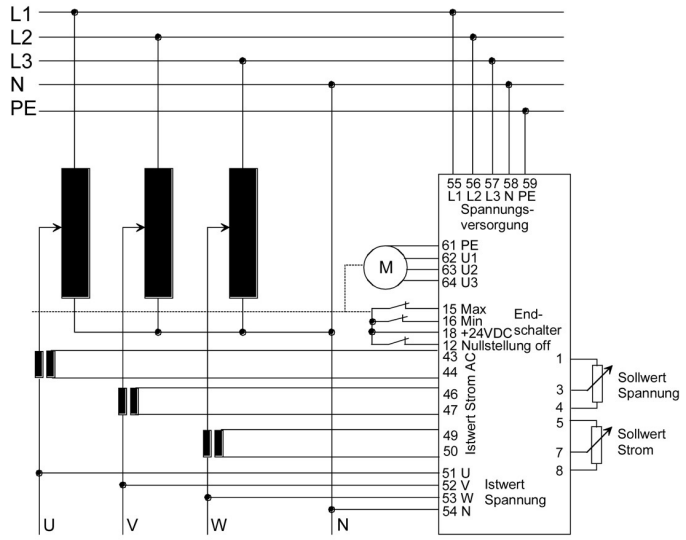

NLR 7000. 2 = Variable DC Control

Active current-voltage converters DC

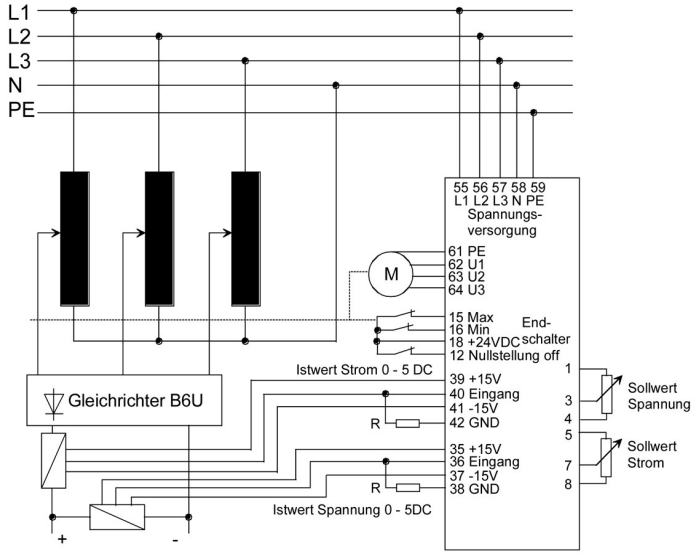

Last modified: 27.03.2018. All data is provided to the best of our knowledge and awareness and is subject to error and amendment.

Your contact:
+49-(0)2 12-88 04-0 • info@reo.de

NLR 7000

Control Unit for Motorised Variable Transformers

NLR 7000. 3 = constant voltage + _ 10-30 %

Voltage Stabilizers

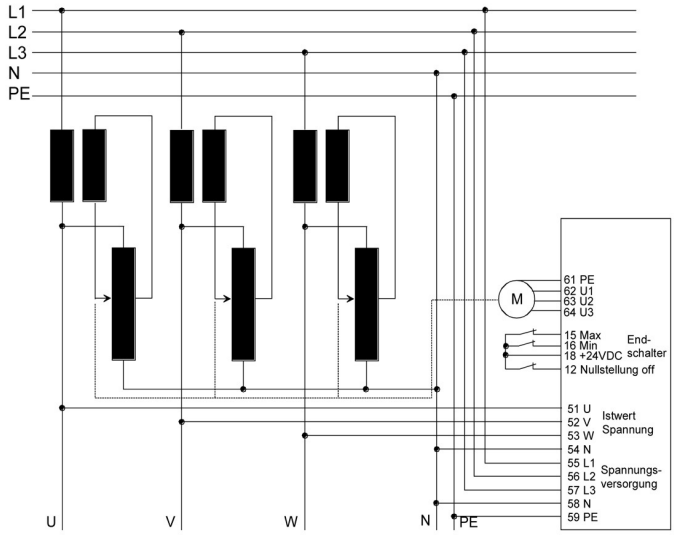

Last modified: 27.03.2018. All data is provided to the best of our knowledge and awareness and is subject to error and amendment.