Your contact:
+49-(0)2 12-88 04-0 • info@reo.de

TVR 6500

Control Unit for Motorised Variable Transformers



Unique Selling Point

- Voltage range 80 - 265 VAC
- Additional switching

Description

Control Unit for Motorised Variable Transformers

Variable power supplies within the mains voltage and high power range, in the most of the cases, are realised with variable transformers. In general, it is not sufficient to just adjust the voltage or resp. the power, but it is often necessary to keep the adjusted value constant. For this purpose, the variable transformer is driven by a motor which is controlled by a suitable electronic regulator.

The unit described below, is such an electronic regulator for controlling a DC motor with a permanently excited field.
The regulator essentially comprises the following main components:
A power supply, within a voltage range of 80 to 265 VAC, provides the internally required operating voltages and the operating voltage for the servo motor.

The regulator circuit compares the selected set point voltage with the fed back actual voltage, and in case of deviation, produces an error signal, corresponding in amplitude and polarity, which is transmitted to the motor drive circuit.
The actual value input is followed by a precision rectifier which generates the required signal voltage for the regulation circuit from the connected actual value voltage (DC/AC).

The motor drive circuit, in case of deviation between set point and actual value, receives an error signal from the regulator circuit. This signal is converted into a variable pulse-duty factor. The pulse-duty factor determines the adjusting speed of the motor and the direction of rotation of the motor. The input signals of the end limit switches are logaically connected to the direction of rotation signals and thus limit the adjustment range of the drive gear.

Technical Data

Last modified: 27.03.2018. All data is provided to the best of our knowledge and awareness and is subject to error and amendment.

Your contact:
+49-(0)2 12-88 04-0 • info@reo.de

TVR 6500

Control Unit for Motorised Variable Transformers

Technical data

Type	TVR 6500
Set point	0...10 V/0...20 mA
Witching	Switching for two set points (closed = second set point) Switching for testing (closed = manual operation) (without regulation)
Reference voltage	Internal 10 V - Reference voltage
Internal set point setting option	possible
Measured voltage input	0...10 V, DC
Measured voltage input	0...10 V SS AC / 0...7Veff AC
Internal voltage measurement transformers	3x0-500V or 0-500 V or after switching (Internal) 3x0-500V or 0-500 V
	Inputs for limit switches (inhibit)
	Proportional speed control correction
	Adjustable motor response
	Adjustable regulation characteristic (P-term)
Dead time	ca. 200ms
Design	Built into a snap-on module for DIN rail mounting
Connection	Terminal covers
Motor voltage	24 V, DC - 1 A max.
Supply voltage	80V-265 V AC
Setpoint	0...10 V/0...20 mA

Last modified: 27.03.2018. All data is provided to the best of our knowledge and awareness and is subject to error and amendment.

Your contact:
+49-(0)2 12-88 04-0 • info@reo.de

TVR 6500

Control Unit for Motorised Variable Transformers

Dimension drawing

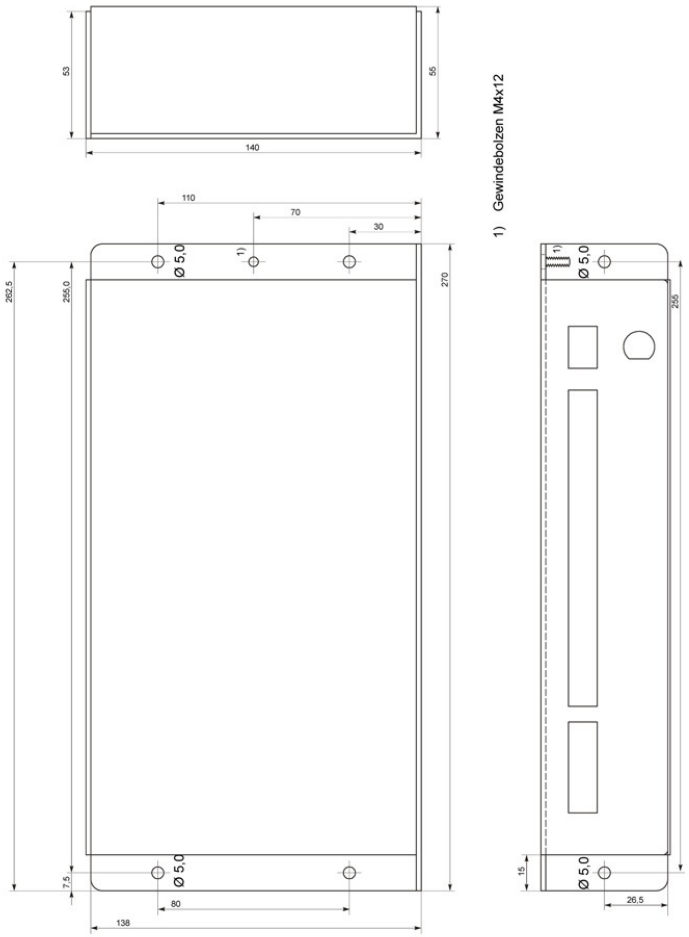

Last modified: 27.03.2018. All data is provided to the best of our knowledge and awareness and is subject to error and amendment.

Your contact:
+49-(0)2 12-88 04-0 • info@reo.de

TVR 6500

Control Unit for Motorised Variable Transformers

Wiring diagram

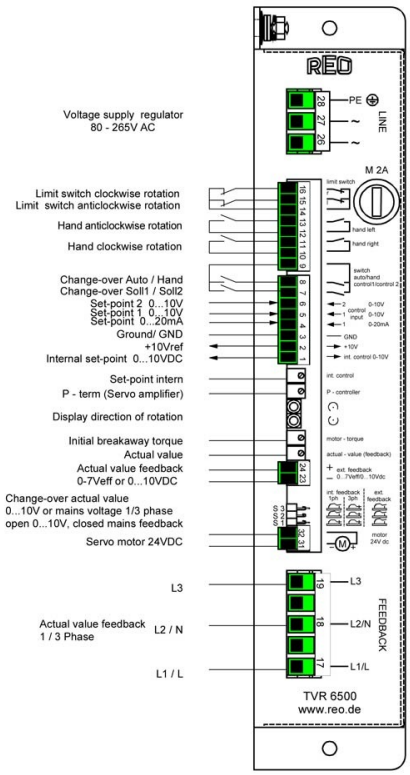

Variable output 0 - 100%
single phase

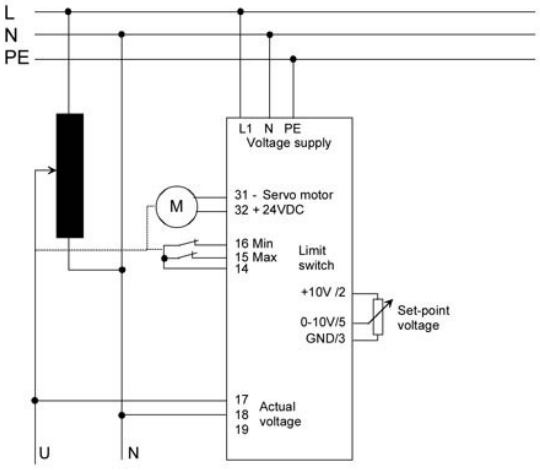

Stabilizers monophasic

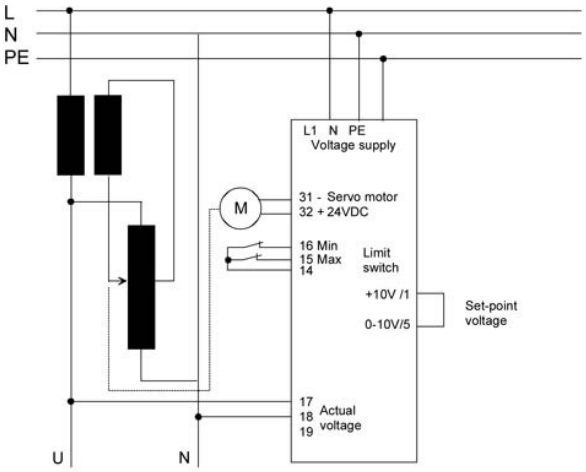

Last modified: 27.03.2018. All data is provided to the best of our knowledge and awareness and is subject to error and amendment.

Your contact:
+49-(0)2 12-88 04-0 • info@reo.de

TVR 6500

Control Unit for Motorised Variable Transformers

Wiring diagram

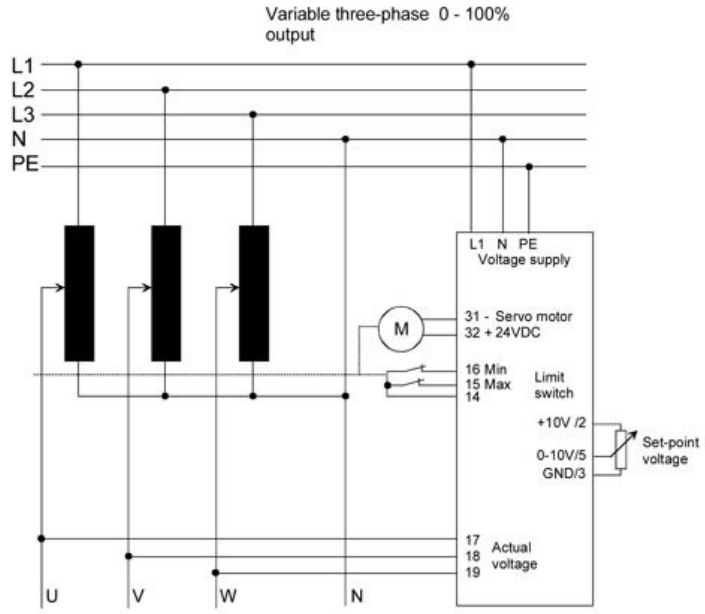

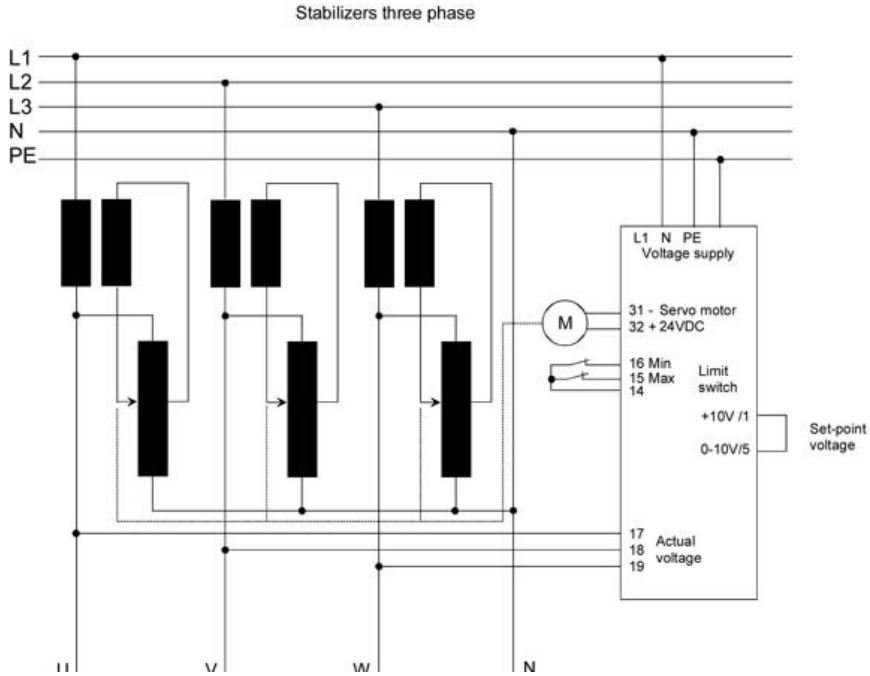

Last modified: 27.03.2018. All data is provided to the best of our knowledge and awareness and is subject to error and amendment.