Your contact:
+49-(0)2 12-88 04-0 • info@reo.de

NTT 400

Onboard power supply transformer

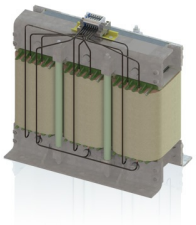

Unique Selling Point

- Vibration and shock tested according to DIN 61373 Cat 1 Class B
- High efficiency
- Low idling losses
- Reduced field scattering
- Low noise
- Reduced weight
- High mechanical resistance
- Mounting in the exhaust duct of the power converter
- Integration into an existing cooling system
- Pollution degree PD3
- Shield winding possible
- Alternative switching groups
- Temperature monitoring

Description

The REO transformer NTT 400 is designed for on-board power supplies, which are fed by the auxiliary converter. He is used to adjust the voltage and for galvanic separation of pulse-width modulated DC link voltage and the consumers of the electrical system . A corresponding sinusoidal filter must be connected between the transformer and the inverter.
The secondary-side load of the isolation transformer can be switchgears, rotating equipment , resistive loads or semiconductor power converters.The transformers are designed for the use in vehicles with AC or DC power (in inverter mode). This guarantees that REO transformers are optimally suited to your application. Our development methods emphasize maximum useful lifetime, cost/benefit optimization and safety.

- Power. 1 - 30 kVA
- Rated voltage

  Primary:
  Rated voltage: (Normal operation): 3x440 Veff 60 Hz
  Rated voltage: (external power supply): 3x400 Veff 50 Hz
  Rated voltage: (reduced operation): 3x345 Veff 47 Hz

  Secondary:
  Voltage: 3x230 Veff

- Cooling: AN / AF
- Protection rating: IP00
- Insulation class: F/H
- Test voltage: EN 50124 / EN 60310
- Operating temperature: -40°C ... +55°C (optional +75°C)
- Humidity: max. 95%
- Pollution: PD 3
- Vibration resistance: Cat.1 class A/B acc. to EN61373
- Voltages: 24 / 42 / 110 / 230 / 400 / 690 Volt (Optional)
- Switching group: Optional

Customer-specific components

Onboard power supply transformer can be custom designed. Are you interested in this product? Please contact us!

Besides the standard components for use in the converter, REO offers customerspecific products - as individual components or as a complete solution in a ontainer. The most important criteria in railway engineering are availability for operation and passenger safety. Here, REO offers customized solutions that we develop step by step in close cooperation with our client.

Technical Data

- Rated power : 1000 - 30000 VA
- Input voltage : 3x440 V

Circuit example

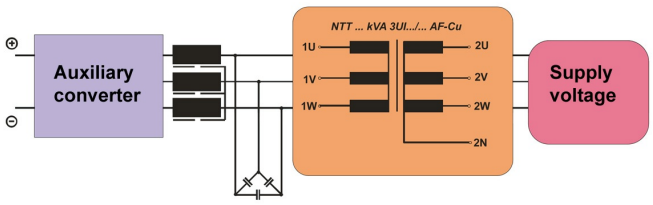

Last modified: 27.03.2018. All data is provided to the best of our knowledge and awareness and is subject to error and amendment.

Your contact:
+49-(0)2 12-88 04-0 • info@reo.de

NTT 400

Onboard power supply transformer

Technical data

Type	Power [kVA]	Total weight [kg]	Copper [kg]	Efficiency [%]	Uk [%]*
NTT 400/1.0	1.0	12	4	92.6	6.7
NTT 400/1.5	1.5	17	5	93.9	5.4
NTT 400/2.5	2.5	26	7	95.0	4.5
NTT 400/4.5	4.5	39	13	95.5	4.1
NTT 400/7.5	7.5	59	22	96.1	3.8
NTT 400/10.0	10.0	73	25	96.4	3.4
NTT 400/15.0	15.0	96	29	97.1	2.6
NTT 400/20.0	20.0	126	36	97.4	2.3
NTT 400/25.0	25.0	150	51	97.5	2.5
NTT 400/30.0	30.0	175	57	97.8	2.1

Last modified: 27.03.2018. All data is provided to the best of our knowledge and awareness and is subject to error and amendment.

Your contact:
+49-(0)2 12-88 04-0 • info@reo.de

NTT 400

Onboard power supply transformer

Dimension drawings

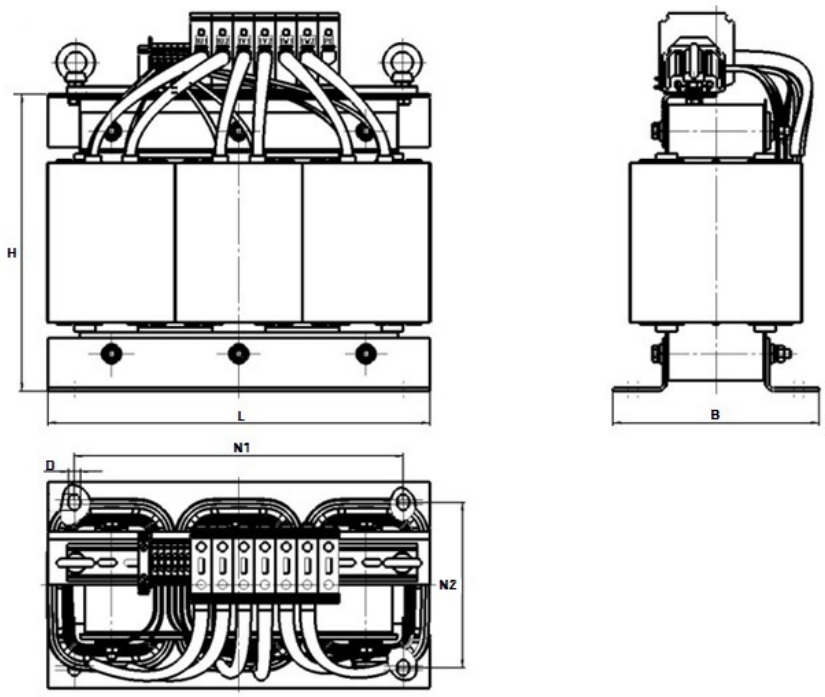

Dimensions

Type	L [mm]	B [mm]	H [mm]	N1 [mm]	N2 [mm]	D [mm]
NTT 400/1.0	230	93	198	74	176	9
NTT 400/1.5	230	117	198	98	176	9
NTT 400/2.5	265	135	228	105	200	10
NTT 400/4.5	300	151	260	123	224	10
NTT 400/7.5	360	173	305	147	264	10
NTT 400/10.0	420	178	360	148	316	13
NTT 400/15.0	420	208	360	178	316	13
NTT 400/20.0	420	238	360	208	316	13
NTT 400/25.0	480	225	410	189	356	13
NTT 400/30.0	480	248	410	212	356	13

Last modified: 27.03.2018. All data is provided to the best of our knowledge and awareness and is subject to error and amendment.