Your contact:
+49-(0)2 12-88 04-0 • info@reo.de

RFT-HiFi

Toroidal fixed transformers, Audio transducer



Unique Selling Point

- no hum
- iron core without air gap , low core losses
- low voltage drop
- minimum total weight
- low volume
- high efficiency
- low magnetic field
- also available with sealed center hole

Description

No hum of REO-Transformers

For audio applications, it is particularly important that the transformers work noiseless work and the hum of the transformer is reduced to a minimum. An optimized design of the windings per volt reduces annoying buzzing sounds. This adjustement ensures a small THD and a pure sound.

Furthermore, the use of an toroidal tapewound cores avoids the vibration of the transformer core. An additional vacuum impregnation of the windings and the lack of air gaps eliminate the typical humming noise of transformers almost completely.

Small space requirement and less weight

Toroidal audio transformers have significant advantages compared to conventional transformers: Their design results in a very small volume and light weight. Like that, the transformer has small dimensions and at the same time high levels of efficiency.

Minimum stray field

Between no-load and full load, the change of the secondary voltage is many times smaller than in transformers with nested core.

In audio appications it is important to keep the stray field as low as possible, so that the other housing parts are not animated to oscillate, which can lead to more disturbing noises.

RFT HiFi:

Broadband audio transformer for adjustment of low-amplifier outputs (Nominal impedance 4 Ohm) at outputs with 70/100-V-constant voltage for professional use; low stray field toroidaö core transformer.

- Power transfer up to 500 W at 70/100 V constant voltage
- THD 0,04...0,09
- Frequency range 40...18 000 Hz
- High electrical safety due to galvanically isolated windings

Technical Data

- Nominal load impedance 100/70V : 20-80/10-39,98 Ω
- Input impedance : 4 Ω

Last modified: 27.03.2018. All data is provided to the best of our knowledge and awareness and is subject to error and amendment.

Your contact:
+49-(0)2 12-88 04-0 • info@reo.de

RFT-HiFi

Toroidal fixed transformers, Audio transducer

Technical data

Type	Peak output power [W]	Rated load impedance 100/70V	Input impedance	Input voltage for nom. 100/70,7V output voltage at 1 kHz	Output voltage at nom. inout at 1 kHz	Peak Performance [W]	Transmission range typ.[dB at Hz]	Typical THD [% at Hz]
RFT-HiFi 125	125	80 / 39,98 Ω	4 Ω	22,36 V	100/70,7 V	125	-0,2 / 50 +0 / 1000 -0,8/-1,3 / 16000	0,05 / 50 0,06 / 1000 0,07 / 16000
RFT-HiFi 250	250	40/19,99 Ω	4 Ω	31,6 V	100/70,7 V	250	-0,1 / 50 +0 / 1000 -1,0 /-1,7 / 16000	0,09 / 50 0,05 / 1000 0,06 / 16000
RFT-HiFi 350	350	28,6/14,28 Ω	4 Ω	37,39 V	100/70,7 V	350	-0,2 / 50 +0 / 1000 -2,7/-3,2 / 16000	0,08 / 50 0,04 / 1000 0,06 / 16000
RFT-HiFi 500	500	20,0/10,0 Ω	4 Ω	44,7 V	100/70,7 V	500	-0,2 / 50 +0 / 1000 -2,0/-2,4 / 16000	0,09 / 50 0,05 / 1000 0,06 / 16000

*

Frequency response and THD: values each at 50 Hz / 1000 Hz / 16000 Hz

Last modified: 27.03.2018. All data is provided to the best of our knowledge and awareness and is subject to error and amendment.

Your contact:
+49-(0)2 12-88 04-0 • info@reo.de

RFT-HiFi

Toroidal fixed transformers, Audio transducer

Mounting Accessories

When ordering, please state:

Mounting Accessories

- 1 Screw, DIN 931 - 8.8
- 1 Metal washer
- 2 Neopren washer(Dimension depends on power rate)

Dimension drawing

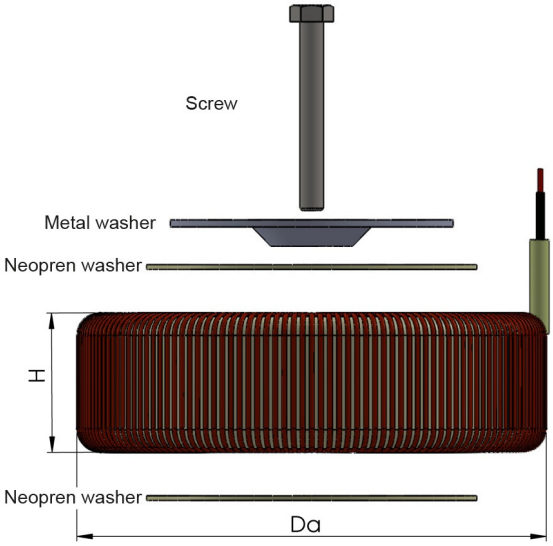

Dimensions

Type	Da [mm]	H [mm]	Total weight [kg]	BF-Set 1xES/2xGS [mm]	DIN 931-8.8 Screws 1x [mm]
RFT-HiFi 125	110	40	1,3	70/80	M6x50
RFT-HiFi 250	110	60	2,3	70/80	M6x70
RFT-HiFi 350	140	60	3,2	90/100	M6x70
RFT-HiFi 500	150	65	4,5	110/120	M8x75

Last modified: 27.03.2018. All data is provided to the best of our knowledge and awareness and is subject to error and amendment.

Your contact:
+49-(0)2 12-88 04-0 • info@reo.de

RFT-HiFi

Toroidal fixed transformers, Audio transducer

Sheme of the magnetic stray field of a toroidal transformer

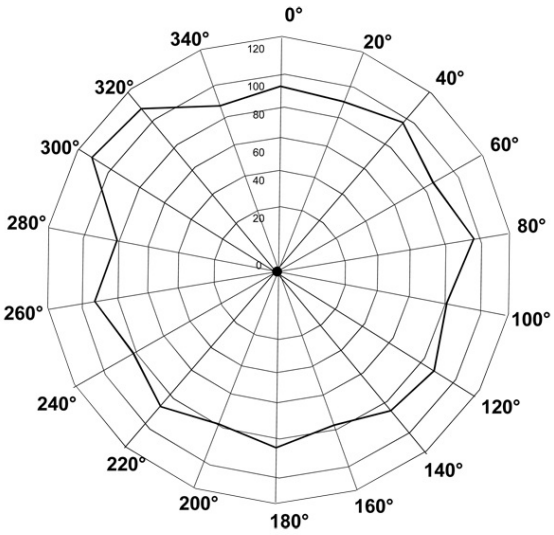

Sheme of the magnetic stray field with optimized winding technology

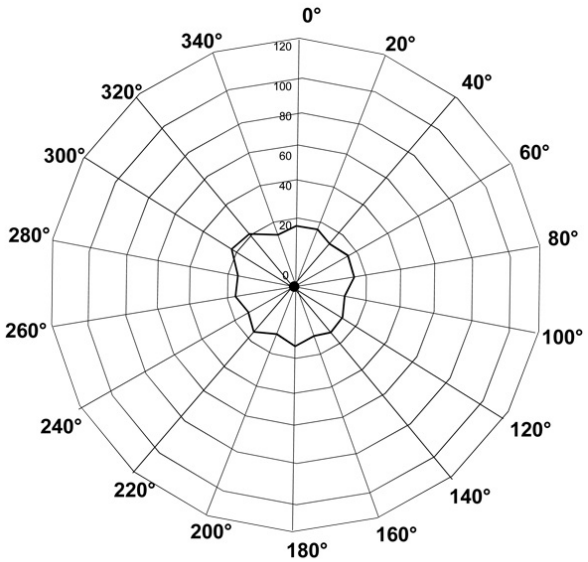

Last modified: 27.03.2018. All data is provided to the best of our knowledge and awareness and is subject to error and amendment.

Your contact:
+49-(0)2 12-88 04-0 • info@reo.de

RFT-HiFi

Toroidal fixed transformers, Audio transducer

Also available with sealed center hole:

