Your contact:
+49-(0)2 12-88 04-0 • info@reo.de

Series IB

Current transformers for printed-circuit boards



Unique Selling Point

- Low space requirement
- Suitable for PCB mounting
- Conforms to UL 94 V0

Description

REO current transformers series IB are suitable for mounting on printed-circuit boards in the electric range of modern drive engineering for control purposes and measurement value logging. All safety regulations as for example double insulation are obtained.

Application area

- Control purposes and measurement value logging

Technical Data

- Primary rated current : 0 - 40 A

Mode of operation

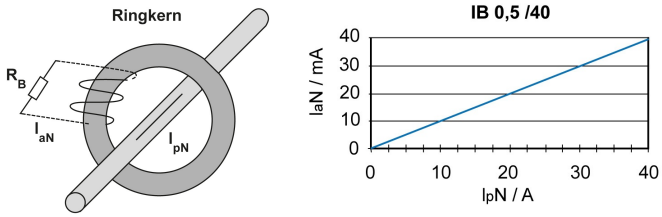

Last modified: 29.01.2020. All data is provided to the best of our knowledge and awareness and is subject to error and amendment.

Your contact:
+49-(0)2 12-88 04-0 • info@reo.de

Series IB

Current transformers for printed-circuit boards

Technical data

Type IB 0,5/...	.5	..20	..40	Units
IpN	0-5	0-20	0-40	A
ImaxpN	7	25	50	A
IaN	0-10	0-25	0-40	mA
Psek	0-0,010	0-0,025	0-0,040	VA
KN	500	800	1000	1:
UBü	0-1	0-1	0-1	V
RB	100	40	25	Ω
FU	≤1	≤1	≤1	%
FLU	≤2	≤2	≤2	%
TA	0- +85	0- +85	0- +85	°C
f	50-400	50-400	50-400	Hz
Isolation	3	3	3	kVac

Last modified: 29.01.2020. All data is provided to the best of our knowledge and awareness and is subject to error and amendment.

Your contact:
+49-(0)2 12-88 04-0 • info@reo.de

Series IB

Current transformers for printed-circuit boards

Dimension drawings

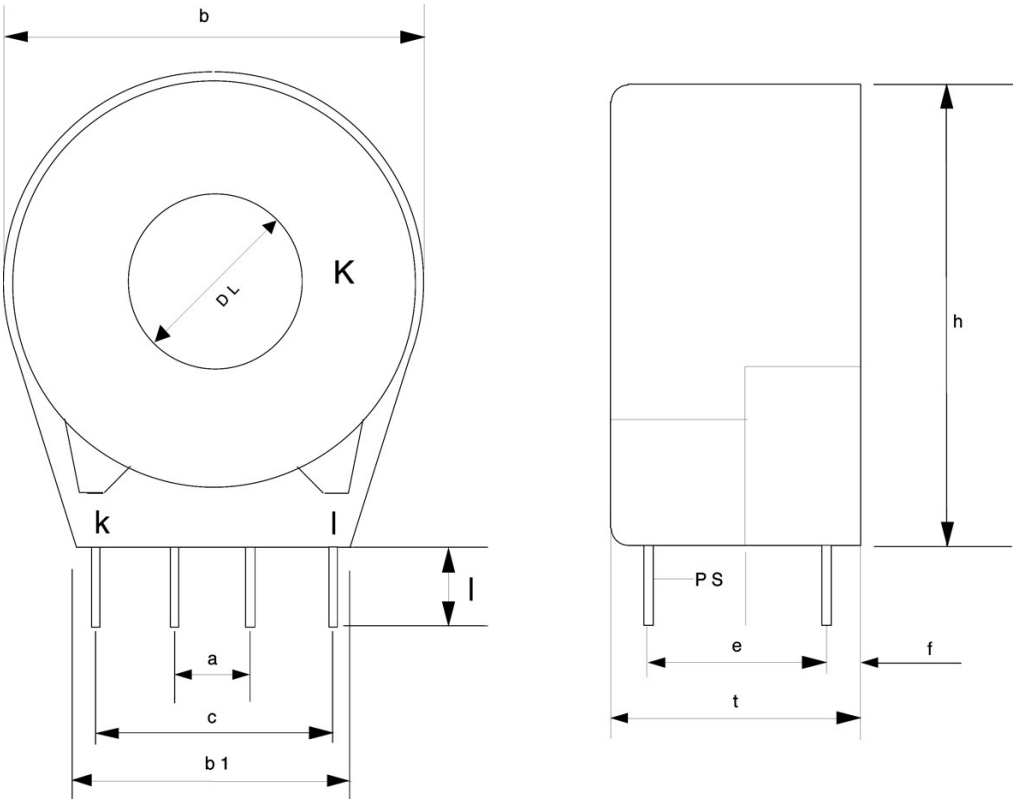

Dimensions

Type	PIN-connection	Height [h]	Width [b] [b1]	Depth [t]	Center hole [DL]	PIN Strength [PS]	PIN Measure [a]	PIN distance [c]	PIN distance [f]	PIN distance [e]	PIN length [l]
IB/5	0 - 5 A	30	26,5/17,5	14,5	10,5	0,7 x 0,7	4,4	15	1,1	10,9	5,0
IB/20	0 - 20 A	30	26,5/17,5	14,5	10,5	0,7 x 0,7	4,4	15	1,1	10,9	5,0
IB/40	0 - 40 A	30	26,5/17,5	14,5	10,5	0,7 x 0,7	4,4	15	1,1	10,9	5,0

Last modified: 29.01.2020. All data is provided to the best of our knowledge and awareness and is subject to error and amendment.