Your contact:
+49-(0)2 12-88 04-0 • info@reo.de

REOLOAD 102

REO Resistive load



Unique Selling Point

- Equipment can be controlled locally or via a PLC.
- fine adjustment locally using motorised circular adjustment potentiometer or remotely via PLC
- additional 24 VDC supply provided for PLC control
- transportable version and option of connection via plug connectors or test lead sockets possible

Description

Applications: These load units are designed for continuous operation and are used for endurance testing of converters and switch mode power supplies for railway applications.

- Conform to VDE 0100
- Test voltage:3 kV
- Protection: IP 20
- Ambient temperature: 40 °C

Features

- 7 fixed resistor stages and a fine trimming stage
- control by Ø 22 mm push-buttons and switches
- integral forced cooling and digital interface for external PLC control with 24 V DC relay
- Individual resistor stages can be switched in and out via contactors.

Technical Data

- Voltage : 250 V
- Power : 5-25 kW

Connection diagram

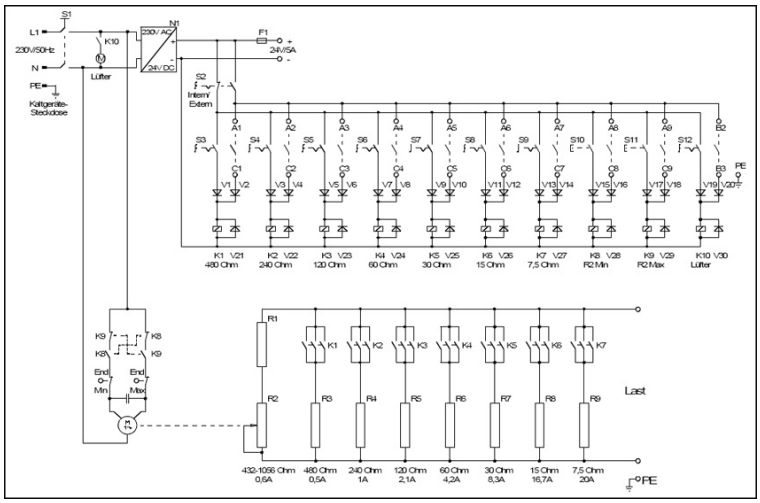

Last modified: 27.03.2018. All data is provided to the best of our knowledge and awareness and is subject to error and amendment.

Your contact:
+49-(0)2 12-88 04-0 • info@reo.de

REOLOAD 102

REO Resistive load

Technical data

Type	Supply Voltage [V]	Ohmic Values [Ω]	Current [A]	max Power [kW]
REOLOAD 102/5				5
REOLOAD 102/10				10
REOLOAD 102/15	max. 1000 AC/DC	230	1 - 2500	15
REOLOAD 102/20				20
REOLOAD 102/25				25

Control inputs: 24 V DC

Fine trim stage adjustment time: 35 secs for the full control range

Surface finish: RAL 7032

FA Cooling

Dimension drawing

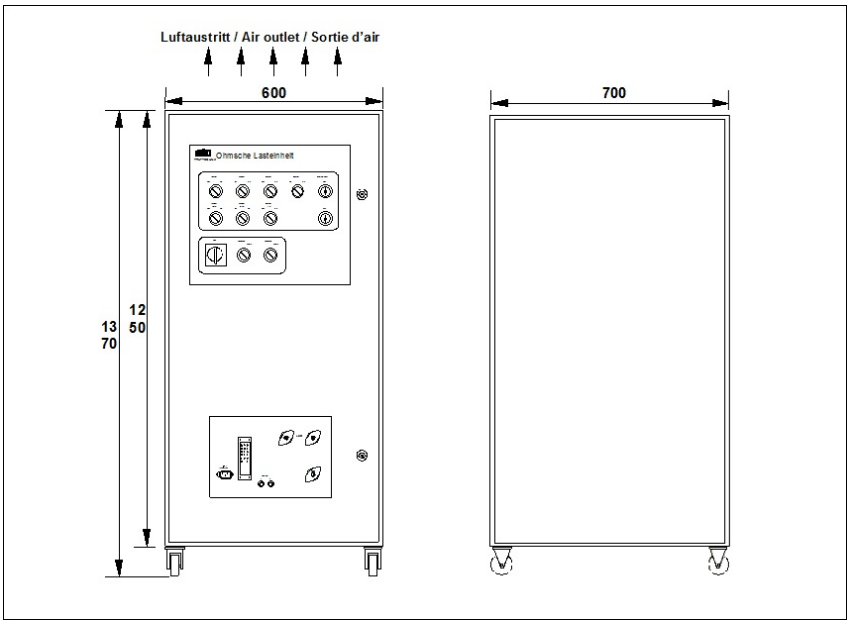

Last modified: 27.03.2018. All data is provided to the best of our knowledge and awareness and is subject to error and amendment.