Your contact:
+34 937 509 994 •
info@reospain.com

Series IE modular

closed-loop current transformers

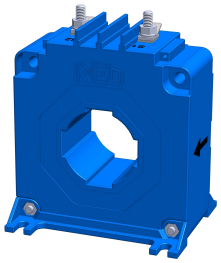

Punto de venta único

- Bolts or flat plug connection
- Bushing-type current transformers for direct conductor feedthrough
- In-phase current representation
- Accuracy classes: 1; 0.5 ; 0.2
- Toroidal cores made of high-quality magnetic cores
- Frequency range 16 2/3 to 400 Hz optional
- In-house core production: Special designs are possible
- High core output power and high-quality insulation (UL)
- Electrically isolated primary and secondary circuits
- Easy-to-assemble modular-type housing
- Variable connections, e.g. bolts, flat plugs, litz wires
- Wide range of housings with various push-through openings
- Very long lifetime

Descripción

In the case of bushing-type current transformers, the customer's primary wire is pushed through the current transformer opening in the housing. The push-through opening depends on the size of the primary current.
Wound primary type current transformers have a primary winding and a secondary winding. Both windings are applied on the closed toroidal core and are isolated from each other by insulation. This principle applies mainly where primary currents are small. Low-voltage current transformers for the proportional transformation of large currents to directly measurable smaller current values.

According to: EN/IEC 61869-1/2
Primary rated current: 500, 1000, 2500 A
Frequency range: 50 - 400 Hz

Applications:

- Industry
- Renewable energy sources
- Railway engineering
- Energy, automation and building technology

Ficha técnica

- Corriente nominal primaria : 500 - 2500 A
- Umgebungstemperatur : -25... +70 °C
- Gama de frecuencias : 50... -400 Hz

Last modified: 12.10.2018. Todos los datos son proporcionados en base a nuestra información actual y pueden estar sujetos a modificaciones *******

Your contact:
+34 937 509 994 •
info@reospain.com

Series IE modular

closed-loop current transformers

Technical data

Type IE modular		500	1000	2500 A	
IPN	Primary rated current	500	1000	2500	[A]
ImaxPN	Max. primary rated current	600	1200	3000	[A]
IaN	Secondary current		1000		[mA]
RB	Load resistance	5	15	30	[Ω]
URB	Load voltage	5	15	30	[V]
PSek	Capacity	5	15	30	[VA]
KN	Transmission ratio	500	1000	2500	
Fi	Measuring accuracy [50 Hz]	0,5	0,5	0,5	[%]
f	Frequency		50 - 400		[Hz]
TA	Ambient temperature		-25... +70		[°C]
Vp	Insulation test		3		[KVac]

Last modified: 12.10.2018. Todos los datos son proporcionados en base a nuestra información actual y pueden estar sujetos a modificaciones *******

Your contact:
+34 937 509 994 •
info@reospain.com

Series IE modular

closed-loop current transformers

1

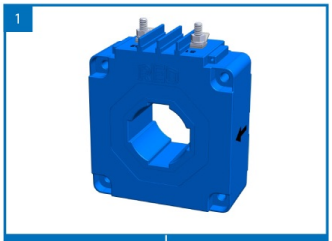

IE-A Basic model with front cover	Article no.
IE-A-500	306422050110000
IE-A-1000	306422010210000
IE-A-2500	306422025210000

2

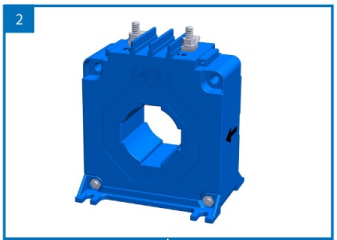

IE-A-F Basic model with front cover and mounting feet frontal	Article no.
IE-A-F-500	306422050110100
IE-A-F-1000	306422010210100
IE-A-F-2500	306422025210100

3

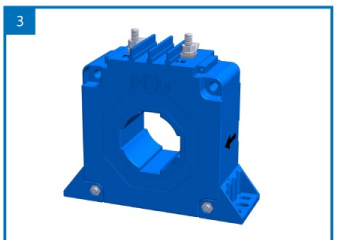

IE-A-L Basic model with front cover and mounting feet lateral	Article no.
IE-A-L-500	306422050110400
IE-A-L-1000	306422010210400
IE-A-L-2500	306422025210400

Dimension drawing

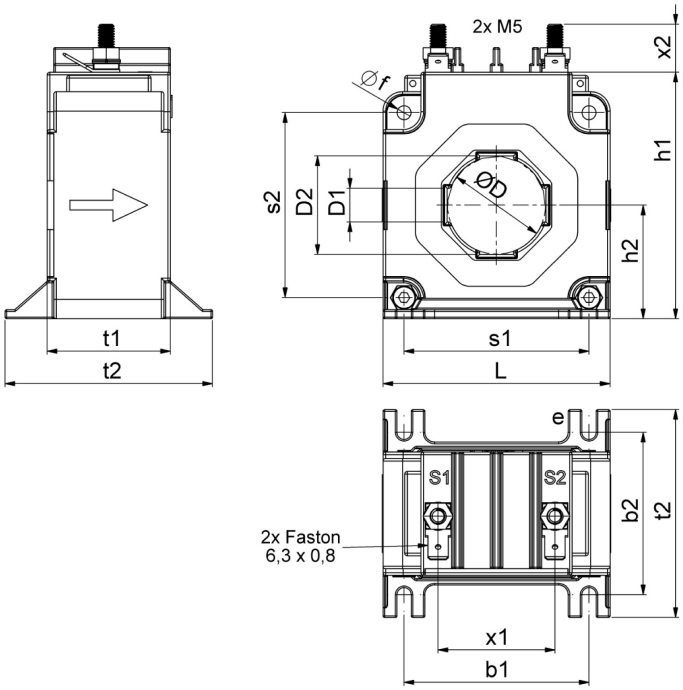

Dimensions

Type	l [mm]	h1/h2 [mm]	t1/t2 [mm]	s1/s2 [mm]	b1/b2 [mm]	D [mm]	D1xD2 [mm]	f [mm]	e [mm]	x1/x2 [mm]
IE Modul	70	76/35	38/64	57/57	57/50	30,2	30,4x10,4	4,3	4,3	36/15
IE Modul	94	100/47	42/72	78/78	78/60	38,5	40,5x13,5	5,3	5,3	36/15
IE Modul	135	141/67,5	52/88	102/102	102/70	57,5	60,5x20,5	6,5	6,5	36/15

Last modified: 12.10.2018. Todos los datos son proporcionados en base a nuestra información actual y pueden estar sujetos a modificaciones *******

Your contact:
+34 937 509 994 •
info@reospain.com

Series IE modular

closed-loop current transformers

Accessories

